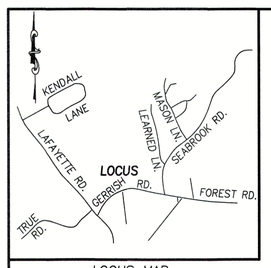

LOCUS MAP
N.T.S.

FLEXIBLE RESIDENTIAL DEVELOPMENT

AT

9 GERRISH ROAD

IN

SALISBURY, MA

JUNE 2020

SALISBURY PLANNING BOARD APPROVAL

DATE

22/19

RECORD OWNER

DANIEL S. DESTEFANO
804 HAVERHILL STREET
ROWLEY, MA 01969
BK. 38212 PG 307

TOTAL AREA
557,428 S.F.
12.80 ACRES
UPLAND AREA
423,878 S.F.±
9.73 ACRES±
76.0% OF ENTIRE LOT

PLAN INDEX

SHEET NO.	TITLE
C-1	COVER SHEET
C-2	EXISTING CONDITIONS PLAN
C-3	LEGEND/NOTES
C-4	SKETCH PLAN
C-5	GRADING PLAN
C-6	PROFILE
C-7	SITE DETAILS
C-8	DRAINAGE DETAILS
C-9	EROSION CONTROL DETAILS
E-1	LIGHTING PLAN
L-1	LANDSCAPE PLAN

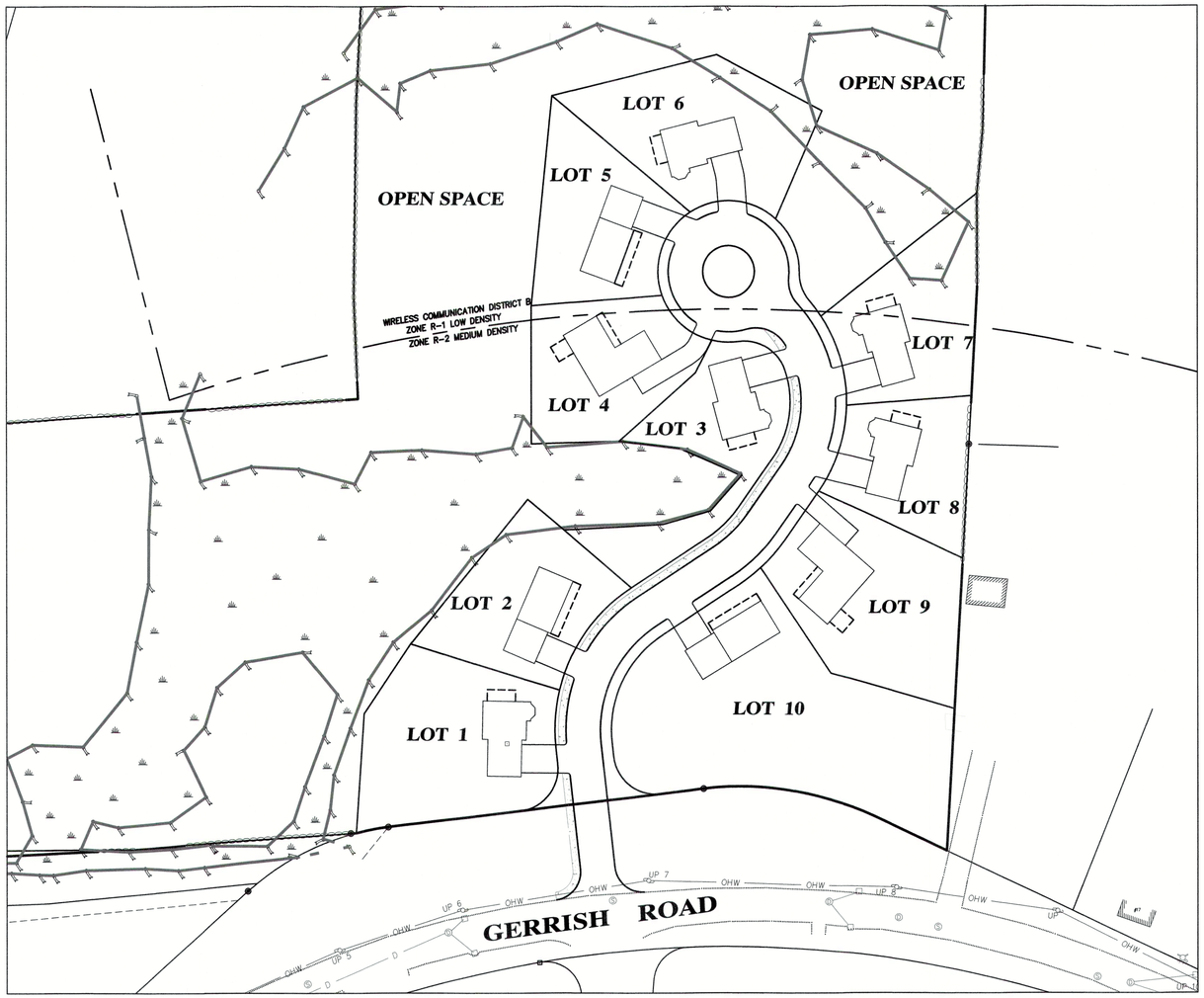

E.C.L.O. #3054

ZONING DISTRICT R-1

MINIMUM REQUIREMENTS

AREA	2 ACRES
FRONTAGE	200 FEET
FRONT SETBACK	40 FEET
SIDE SETBACK	20 FEET
REAR SETBACK	20 FEET
MAX BLDG COVER	20%

ZONING DISTRICT R-2

MINIMUM REQUIREMENTS

AREA	1 ACRE
FRONTAGE	150 FEET
FRONT SETBACK	40 FEET
SIDE SETBACK	20 FEET
REAR SETBACK	20 FEET
MAX BLDG COVER	25%

GRAPHIC SCALE
50 0 25 50 100 200
(IN FEET)
1 inch = 50'

COMMONWEALTH OF MASSACHUSETTS
CHRISTOPHER M. YORK
CIVIL
No. 49181
REGISTERED PROFESSIONAL ENGINEER
6-18-20

PREPARED FOR

DANIEL S. DESTEFANO
804 HAVERHILL STREET
ROWLEY, MA 01969

NO.	DATE	DESCRIPTION	BY

MEI
MILLENNIUM ENGINEERING, INC.
ENGINEERING AND LAND SURVEYING
62 ELM ST. SALISBURY, MA 01952 (978) 463-8980
13 HAMPTON RD. EXETER, NH 03833 (603) 778-0528

SCALE: 1"=50' | DESG. BY: C.M.Y.
DATE: JUN. 18, 2020 | CHKD. BY: E.W.B.
PROJECT: M193653

SITE PLAN
IN
SALISBURY, MA
SHOWING
PROPOSED SUBDIVISION
AT
9 GERRISH ROAD

COVER SHEET

SHEET: C-1

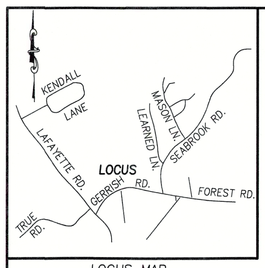

LOCUS MAP
N.T.S.

ZONING DISTRICT R-1

MINIMUM REQUIREMENTS

AREA	2 ACRES
FRONTAGE	200 FEET
FRONT SETBACK	40 FEET
SIDE SETBACK	20 FEET
REAR SETBACK	20 FEET
MAX BLDG COVER	20%

ZONING DISTRICT R-2

MINIMUM REQUIREMENTS

AREA	1 ACRE
FRONTAGE	150 FEET
FRONT SETBACK	40 FEET
SIDE SETBACK	20 FEET
REAR SETBACK	20 FEET
MAX BLDG COVER	25%

NOTES:

THIS PLAN DOES NOT SHOW ANY UNRECORDED OR UNWRITTEN EASEMENTS WHICH MAY EXIST. A REASONABLE AND DILIGENT ATTEMPT HAS BEEN MADE TO OBSERVE ANY APPARENT, VISIBLE USES OF THE LAND; HOWEVER, THIS DOES NOT CONSTITUTE A GUARANTEE THAT NO SUCH EASEMENTS EXIST.

THE CERTIFICATIONS SHOWN HEREON ARE NOT INTENDED AS CERTIFICATION TO TITLE OR OWNERSHIP OF PROPERTY SHOWN. OWNERS OF ADJOINING PROPERTIES ARE ACCORDING TO CURRENT TOWN OF SALISBURY ASSESSORS RECORDS.

I CERTIFY:
THAT THIS ACTUAL SURVEY WAS MADE ON THE GROUND BETWEEN NOVEMBER 16, 2016, AND DECEMBER 16, 2016 AND THAT THE STRUCTURES AND PHYSICAL FEATURES ARE LOCATED AS SHOWN TO THE BEST OF MY ABILITY AND BELIEF.

COMMONWEALTH OF MASSACHUSETTS
JEFFREY S. HOFMANN
#36381
PROFESSIONAL LAND SURVEYOR

PROFESSIONAL LAND SURVEYOR — DATE 6/18/20

BASIS OF BEARINGS

ESSEX COUNTY LAYOUT PLAN #3054

OWNER OF RECORD

DANIEL S. DESTEFANO
BK. 38212 PG 307

PLAN REFERENCES

ESSEX COUNTY LAYOUT PLAN #3054

"PLAN OF LAND TOWN OF SALISBURY OFF LAFAYETTE STREET"
BY: CAMMET ENGINEERING
DATE: 4-10-14 SCALE: 1"=100'
(NOT RECORDED)

"RIGHT OF WAY AND TRACK MAP BOSTON AND MAINE R.R."
STATION 2096+64 TO STATION 2149+44
V.3. M. 38

"LAND IN SALISBURY, MASS – ABBIE A. EATON, ET AL TO BOSTON & MAINE R.R. – SCALE: 1"=100' – MARCH 1901".
ON FILE AT THE PLAN ROOM AT ESSEX SOUTH DISTRICT REGISTRY OF DEEDS.

N/F
BELIEVED TO BE HEIRS OR ASSIGNS OF TRUE

N/F
TOWN OF SALISBURY
BK. 23113 PG 351

TOTAL AREA
= 557,428 S.F.
= 12.80 AC.

WIRELESS COMMUNICATION DISTRICT B
ZONE R-1 LOW DENSITY
ZONE R-2 MEDIUM DENSITY

FORMERLY BOSTON AND MAINE RAILROAD
E.C.L.O. #3054

(OLD) GERRISH ROAD

GERRISH ROAD
EDGE OF PAVEMENT

TROUT WAY

EXISTING 1 STORY DWELLING #9

SHED

PAVED DRIVEWAY

EXISTING TREE LINE

LEDGE OUTCROP

50-FT WETLAND BUFFER ZONE

100-FT WETLAND BUFFER ZONE

LEGEND

E.C.B.	ESSEX COUNTY BOUND		SEWER MAN HOLE
D.H.	DRILL HOLE		DRAIN MAN HOLE
I ROD	IRON ROD		CATCH BASIN
FND.	FOUND		WELL
	STONE WALL	UP 7	UTILITY POLE
WF A-29	WET FLAG DESIGNATION	—D—	DRAINAGE
	WETLAND AREA	—W—	WATER
22	EXISTING ELEVATION CONTOUR	—S—	SEWER
0/00	ASSESSORS MAP / ASSESSORS PARCEL	—G—	GAS
		—OHW—	OVERHEAD WIRE

GRAPHIC SCALE
40 0 20 40 80 160
(IN FEET)
1 inch = 40'

PREPARED FOR
DANIEL S. DESTEFANO
804 HAVERHILL STREET
ROWLEY, MA 01969

PLAN OF LAND
IN
SALISBURY, MA
SHOWING
EXISTING CONDITIONS
AT
9 GERRISH ROAD

MEI
MILLENNIUM ENGINEERING, INC.
ENGINEERING AND LAND SURVEYING
62 ELM ST. SALISBURY, MA 01952 (978) 463-8980
13 HAMPTON RD. EXETER, NH 03833 (603) 778-0528

SCALE: 1"=40'	CALC. BY: P.D.B.	PROJECT: M193653
DATE: JUN. 18, 2020	CHKD. BY: J.S.H.	

EXISTING CONDITIONS

SHEET: C-2

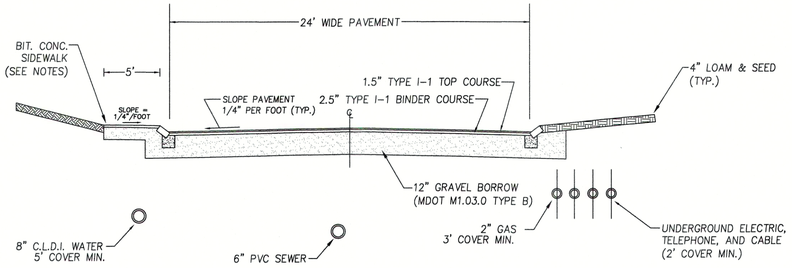

ROADWAY CROSS-SECTION
STA. 0+00 TO STA. 4+75±

N.T.S.

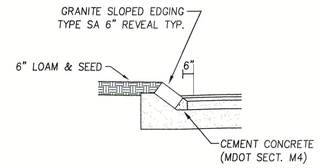

TYPICAL SLOPED EDGING DETAIL

N.T.S.

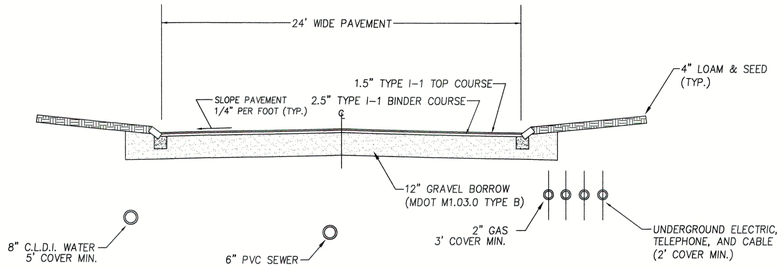

ROADWAY CROSS-SECTION
STA. 4+75± TO STA. 6+83

N.T.S.

LEGEND

EXISTING	PROPOSED	
	CB	CATCH BASIN (OR GUTTER INLET, OR LEACHING BASIN)
	CBCI (OR GICI)	CATCH BASIN (OR GUTTER INLET) WITH CURB INLET
		CURB (OR BERM) – TYPE NOTED
		EDGE OF ROAD
109	108	CONTOUR
		SEWER MANHOLE
		DRAINAGE MANHOLE
		GAS GATE
		WATER GATE
		SEPTIC TANK
		HYDRANT
FA	FA	FIRE ALARM BOX
		POST MOUNTED PEDESTRIAN LIGHT
		UTILITY POLE
D	D	DRAIN PIPE
S	S	SEWER MAIN
S		SEWER FORCE MAIN
UE	UE	UNDERGROUND ELECTRIC
W	W	WATER MAIN
MB	MB	MAIL BOX
		HIGHWAY GUARD (TYPE NOTED)
x x	x x	FENCE (SIZE AND TYPE NOTED)
		EASEMENT LINE
		PROPERTY LINE
		100 FT BUFFER ZONE
8 N00°00'00"E +12.34		BASE OR SURVEY LINE
	PC 8 N00°00'00"E +12.34	CONSTRUCTION BASELINE
		WHEELCHAIR RAMP (WCR)
		CONCRETE SIDEWALK
		HAND CORE
	SF	SILT SOCK
		WETLAND
		INFILTRATOR

SURVEY

120	WETLAND DELINEATION FLAG
C.B.	CONCRETE BOUND
S.B.	STONE BOUND
D.H.	DRILL HOLE
PK	MASONRY NAIL
I.P.	IRON PIPE
I ROD	IRON ROD
FND.	FOUND
N/FND.	NOT FOUND
0 / 00	ASSESSORS MAP AND PARCEL

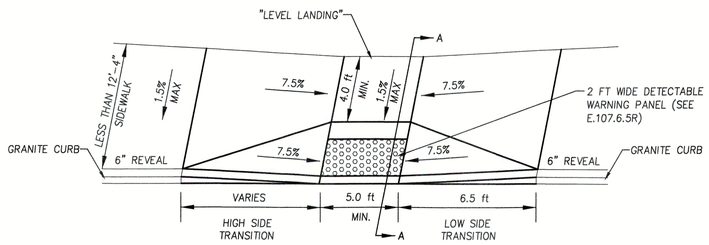

NOTES:

1. RAMP CROSS SECTION TO BE SAME AS SIDEWALK; I.E. DEPTH OF SURFACE AND FOUNDATION.
2. PORTLAND CEMENT CONCRETE RAMPS ARE TO BE TEXTURED BY BROOMING IN A DIRECTION PARALLEL TO THE LENGTH OF THE RAMP.
3. BASE OF RAMP SHALL MEET PAVEMENT GUTTER SUCH THAT THERE IS NO DIFFERENCE IN ELEVATION. RAMP SHALL BE CONSTRUCTED SUCH THAT WATER DOES NOT "PUDDLE" AT THE BASE OF THE RAMP.
4. THE PAVEMENT AT THE BASE OF THE RAMP SHALL BE PART OF THE CONTINUOUS TOP COURSE. THE USE OF A "PAVEMENT PATCH" TO COMPLY WITH THE CONDITIONS IN NOTE 3, ABOVE IS PROHIBITED.
5. RAMPS SHALL CONFORM TO MASS DOT WHEELCHAIR RAMP STANDARDS – LATEST REVISION.

A.D.A. ACCESS RAMP DETAIL

N.T.S.

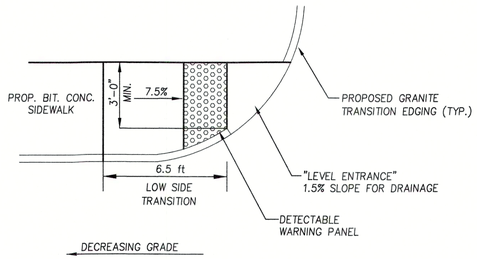

ROADWAY PROFILE GRADE		HIGH SIDE TRANSITION LENGTH
%	G	ENGLISH UNITS
0	0.00	6'-6"
1	0.01	7'-8"
2	0.02	9'-0"
3	0.03	11'-0"
4	0.04	14'-0"
>4	>0.04	15'-0" MAX

SIDEWALK NOTES

SIDEWALKS SHALL BE FIVE FEET IN WIDTH FOR THEIR ENTIRE LENGTH, WITH A 1% CROSS SLOPE (1.5% MAX).

SIDEWALKS SHALL BE CONSTRUCTED WITH A 1.5" TYPE I-1 BITUMINOUS CONCRETE FINISH COURSE, A 1.5" TYPE I-1 BITUMINOUS CONCRETE BINDER COURSE OVER AN 8" GRAVEL BASE (MDOT M1.03.0 TYPE C).

WHERE SIDEWALKS TRAVERSE A DRIVEWAY, THE GRAVEL BASE SHALL BE 12" THICK.

GENERAL NOTES

1. THE CONTRACTOR SHALL REPORT TO THE OWNER AND ENGINEER ANY SIGNIFICANT VARIATIONS IN EXISTING SITE CONDITIONS. ANY PROPOSED REVISIONS TO THE WORK SHALL NOT BE UNDERTAKEN UNTIL REVIEWED AND APPROVED BY THE OWNER AND REGULATING CITY AND/OR STATE AGENCIES.
2. THE CONTRACTOR SHALL INSTALL ALL SYSTEM COMPONENTS IN ACCORDANCE WITH THE MANUFACTURER'S SPECIFICATIONS AND ALL APPLICABLE ELECTRICAL, PLUMBING, AND SANITARY CODES.
3. ALL WORK SHALL CONFORM TO; THE SALISBURY PLANNING BOARD RULES AND REGULATIONS GOVERNING THE SUBDIVISION OF LAND, THE WETLANDS PROTECTION ACT (310 CMR 10.00), THE ORDER OF CONDITIONS ISSUED BY THE SALISBURY CONSERVATION COMMISSION, AND THESE PLANS.
4. THE LOCATION OF ALL UTILITIES, AS SHOWN ON THESE PLANS, ARE BASED UPON PLANS AND RECORD INFORMATION PROVIDED BY MUNICIPAL AND PRIVATE UTILITY COMPANIES AND ARE CONSIDERED APPROXIMATE BOTH AS TO SIZE AND LOCATION. NO WARRANTY IS MADE AS TO THE ACCURACY OF THESE LOCATIONS OR THAT ALL UTILITIES ARE SHOWN. THE CONTRACTOR SHALL NOT RELY ON THESE PLANS FOR SUCH INFORMATION AND WILL MAKE EXAMINATIONS IN THE FIELD BY VARIOUS AVAILABLE RECORDS, UTILITY COMPANIES AND INDIVIDUALS, AS TO THE LOCATION OF ALL SUBSURFACE STRUCTURES.
5. THE CONTRACTOR SHALL VERIFY THE LOCATION OF EXISTING UTILITIES BY CONTACTING "DIG-SAFE" AT LEAST 72 HOURS PRIOR TO ANY EXCAVATION. DIG-SAFE TELEPHONE NUMBER: 1-888-344-7233.
6. THE CONTRACTOR SHALL FIELD CHECK ALL DIMENSIONS AND ELEVATIONS BEFORE PROCEEDING WITH THE NEW WORK. HE/SHE SHALL EXCAVATE TO VERIFY PERTINENT DRAINAGE INVERTS AND POTENTIAL UTILITY CONFLICTS. ANY DISCREPANCIES SHALL BE REPORTED TO THE OWNER IMMEDIATELY.
7. ALL EXISTING STRUCTURES AND SURFACES, UNLESS OTHERWISE SHOWN, SHALL BE COMPLETELY REMOVED FROM THE AREAS OF WORK. ALL TREES SCHEDULED FOR REMOVAL SHALL BE FIELD MARKED AND APPROVED FOR REMOVAL BY THE OWNER PRIOR TO CUTTING OPERATIONS.
8. THE CONTRACTOR IS RESPONSIBLE FOR INITIATING, MAINTAINING AND SUPERVISING ALL SAFETY PRECAUTIONS AND PROGRAMS IN CONNECTION WITH THE WORK. THE CONTRACTOR SHALL TAKE ALL NECESSARY PRECAUTIONS FOR THE SAFETY OF THE PUBLIC, EMPLOYEES, AND ALL OTHER PERSONS ASSOCIATED WITH THE PROJECT. HE/SHE SHALL COORDINATE AND BE RESPONSIBLE FOR ALL SAFETY SIGNING, BARRIERS AND TEMPORARY PAVEMENT MARKINGS NECESSARY TO PROVIDE A SMOOTH AND PROPER TRANSITION FOR TRAFFIC FLOW.
9. IF REQUIRED BY THE CONTRACTOR, OVERHEAD LINES SHALL BE RELOCATED BY THE UTILITY COMPANY AT THE CONTRACTORS EXPENSE.
10. ALL SEWER MAINS AND SERVICES SHALL BE INSTALLED AT LEAST 10 FEET HORIZONTALLY OR 18 INCHES VERTICALLY FROM PROPOSED WATER MAINS AND SERVICES AND SHALL MAINTAIN 5 FEET OF COVER OVER THE TOP OF THE PIPING, UNLESS OTHERWISE SHOWN OR APPROVED. PIPES SHALL BE ENCASED IN CONCRETE WHERE THIS SEPARATION CANNOT BE OBTAINED.
11. ALL WATER MAINS SHALL BE INSTALLED WITH A MINIMUM OF 5 FEET OF COVER OVER THE TOP OF THE PIPE, UNLESS OTHERWISE SHOWN OR APPROVED.
12. WHENEVER SEWER MAINS MUST CROSS WATER MAINS, THE SEWER SHALL BE CONSTRUCTED AS FOLLOWS; A) JOINTS SHALL BE MECHANICAL TYPE WATER PRESSURE RATED WITH ZERO LEAKAGE WHEN TESTED AT 25 PSI FOR GRAVITY SEWERS AND 1.5 TIMES WORKING PRESSURE FOR FORCE MAINS AND JOINTS NOT TO BE LOCATED WITHIN 9 FEET OF THE CROSSING; B) SEWER SERVICES SHOULD BE INSTALLED A MINIMUM OF 18 INCHES BELOW WATER MAINS. IF SEPARATION IS LESS THAN 18 INCHES, SEWER SERVICE SHALL BE CONCRETE ENCASED OR CONSTRUCTED WITH PRESSURE CLASS PVC FOR A DISTANCE OF 10 FEET EACH SIDE OF THE WATER MAIN. 10-FOOT MINIMUM HORIZONTAL SEPARATION DISTANCE SHALL BE MAINTAINED.
13. INDIVIDUAL BUILDING OWNERS ARE RESPONSIBLE FOR MAINTENANCE OF THEIR SEWER SERVICE FROM THE BUILDING TO THE CONNECTION TO THE SEWER MAIN.
14. ALL STREET, WARNING, AND REGULATORY SIGNS SHALL BE IN CONFORMANCE WITH THE MASSACHUSETTS DEPARTMENT OF TRANSPORTATION MANUAL OF UNIFORM TRAFFIC CONTROL DEVICES AND STANDARD SPECIFICATIONS AND LATEST ADDENDA.
15. 14 DAYS PRIOR TO COMMENCING CONSTRUCTION, THE OWNER/DEVELOPER SHALL PRESENT A CONSTRUCTION SCHEDULE TO THE PLANNING DEPARTMENT.
17. THE OWNER/DEVELOPER SHALL SUBMIT TWO HARD COPIES OF AS-BUILT DRAWINGS TO THE PLANNING BOARD WITHIN 90 DAYS OF ISSUANCE OF OCCUPANCY PERMIT. AS-BUILTS SHALL INCLUDE ALL LANDBASE AND UTILITIES INFORMATION.
18. ONSITE BURIAL OF STUMPS OR ANY OTHER DEBRIS IS PROHIBITED.
19. THE PROPERTY DOES NOT LIE WITHIN THE 100-YEAR FLOOD PLAIN ACCORDING TO F.I.R.M. COMMUNITY PANEL NUMBER 25009C 0126F.
20. ALL ELEVATIONS ARE BASED ON N.A.V.D. 1988.

MATERIAL NOTES

ALL MATERIALS OF THE ELEMENTS IN THE SITE PLAN MUST CONFORM TO THE FOLLOWING STANDARDS:

1. COMMONWEALTH OF MASSACHUSETTS DEPARTMENT OF TRANSPORTATION STANDARD SPECIFICATIONS FOR HIGHWAYS AND BRIDGES (LATEST EDITION)
2. 521 CMR RULES AND REGULATIONS OF THE ARCHITECTURAL ACCESS BOARD (AAB) AND THE AMERICANS WITH DISABILITIES ACT (ADA)
3. SPECIFICATIONS BY THE TOWN OF SALISBURY AS SET FORTH BY SECTION 7 IN THE PLANNING BOARD RULES AND REGULATIONS GOVERNING THE SUBDIVISION OF LAND, DATED DECEMBER 10, 2008
4. UTILITIES INSTALLED PER PENNICHUCK WATER SERVICE CORPORATION SPECIFICATIONS

ROADWAY NOTES

1.) ALL STUMPS, ROCKS AND LEDGE WITHIN THE LIMITS OF THE PROPOSED PAVED WAY SHALL BE REMOVED. ALL LEDGE SHALL BE REMOVED TO A MINIMUM DEPTH OF 2' BELOW FINISHED PAVEMENT GRADE.

2.) ROADWAY SHALL NOT BE CONSTRUCTED DURING FREEZING WEATHER OR ON WET OR FROZEN SUBGRADE.

3.) GRADING AND ROLLING SHALL BE REQUIRED TO PROVIDE A SMOOTH, EVEN, AND UNIFORM COMPACTED BASE WHICH IS COMPACTED TO A MINIMUM DRY DENSITY OF 95 PERCENT.

4.) THE MINIMUM SLOPE FROM THE CROWN OF FINISHED BASE COURSE SHALL BE 1/4"PER FOOT UNLESS OTHERWISE SHOWN.

5.) ALL UNSUITABLE MATERIAL SHALL BE EXCAVATED AND REPLACED WITH SATISFACTORY MATERIAL AND BROUGHT UP TO GRADE WITH GRAVEL BORROW CONTAINING NO STONES GREATER THAN 6" DIAMETER.

6.) AT ALL TIMES DURING CONSTRUCTION, THE SUB-GRADE AND ALL DITCHES SHALL BE CONSTRUCTED AND MAINTAINED SO THAT THE ROADWAY WILL EFFECTIVELY BE DRAINED.

7.) THE CONTRACTOR SHALL REFER TO THE SALISBURY PLANNING BOARD RULES AND REGULATIONS GOVERNING THE SUBDIVISION OF LAND, SECTIONS I – VII.

COMMONWEALTH OF MASSACHUSETTS
CHRISTOPHER M. YORK
CIVIL
No. 49181
REGISTERED PROFESSIONAL ENGINEER
6-18-20

PREPARED FOR

DANIEL S. DESTEFANO
804 HAVERHILL STREET
ROWLEY, MA 01969

NO.	DATE	DESCRIPTION	BY

MEI
MILLENNIUM ENGINEERING, INC.
ENGINEERING AND LAND SURVEYING
62 ELM ST. SALISBURY, MA 01952 (978) 463-8980
13 HAMPTON RD. EXETER, NH 03833 (603) 778-0528

SCALE: 1"=40' | DESG. BY: C.M.Y.
DATE: JUN. 18, 2020 | CHKD. BY: E.W.B.
PROJECT: M193653

SITE PLAN
IN
SALISBURY, MA

SHOWING
PROPOSED SUBDIVISION
AT
9 GERRISH ROAD

TYPICAL SECTIONS/ LEGEND/ GENERAL NOTES

SHEET: C-3

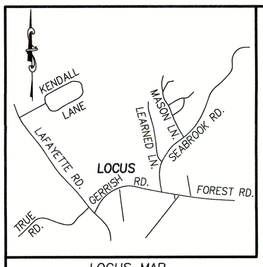

LOCUS MAP
N.T.S.

22/19

RECORD OWNER

DANIEL S. DESTEFANO
804 HAVERHILL STREET
ROWLEY, MA 01969
BK. 38212 PG 307

TOTAL AREA
557,428 S.F.
12.80 ACRES
UPLAND AREA
423,878 S.F.±
9.73 ACRES±
76.0% OF ENTIRE LOT

BASIS OF BEARINGS

ESSEX COUNTY LAYOUT PLAN #3054

PLAN REFERENCES

ESSEX COUNTY LAYOUT PLAN #3054

"PLAN OF LAND TOWN OF SALISBURY
OFF LAFAYETTE STREET"
BY: CAMMETT ENGINEERING
DATE: 4-10-14 SCALE: 1"=100'
(NOT RECORDED)

"RIGHT OF WAY AND TRACK MAP BOSTON AND MAINE R.R."
STATION 2096+64 TO STATION 2149+44
V.3. M. 38

"LAND IN SALISBURY, MASS – ABBIE A. EATON, ET AL TO BOSTON & MAINE R.R. – SCALE: 1"=100' – MARCH 1901".
ON FILE AT THE PLAN ROOM AT ESSEX SOUTH DISTRICT REGISTRY OF DEEDS.

ZONING DISTRICT R-1

MINIMUM REQUIREMENTS

AREA	2 ACRES
FRONTAGE	200 FEET
FRONT SETBACK	40 FEET
SIDE SETBACK	20 FEET
REAR SETBACK	20 FEET
MAX BLDG COVER	20%

ZONING DISTRICT R-2

MINIMUM REQUIREMENTS

AREA	1 ACRE
FRONTAGE	150 FEET
FRONT SETBACK	40 FEET
SIDE SETBACK	20 FEET
REAR SETBACK	20 FEET
MAX BLDG COVER	25%

NOTES:

THIS PLAN DOES NOT SHOW ANY UNRECORDED OR UNWRITTEN EASEMENTS WHICH MAY EXIST. A REASONABLE AND DILIGENT ATTEMPT HAS BEEN MADE TO OBSERVE ANY APPARENT, VISIBLE USES OF THE LAND; HOWEVER, THIS DOES NOT CONSTITUTE A GUARANTEE THAT NO SUCH EASEMENTS EXIST.

THE CERTIFICATIONS SHOWN HEREON ARE NOT INTENDED AS CERTIFICATION TO TITLE OR OWNERSHIP OF PROPERTY SHOWN. OWNERS OF ADJOINING PROPERTIES ARE ACCORDING TO CURRENT TOWN OF SALISBURY ASSESSORS RECORDS.

I CERTIFY:
THAT THIS ACTUAL SURVEY WAS MADE ON THE GROUND BETWEEN NOVEMBER 16, 2016, AND DECEMBER 16, 2016 AND THAT THE STRUCTURES AND PHYSICAL FEATURES ARE LOCATED AS SHOWN TO THE BEST OF MY ABILITY AND BELIEF.

COMMONWEALTH OF MASSACHUSETTS
JEFFREY S. HOFMANN
No. 36381
PROFESSIONAL LAND SURVEYOR

6/18/20
DATE

LEGEND

■ E.C.B.	ESSEX COUNTY BOUND	Ⓢ	SEWER MAN HOLE
● D.H.	DRILL HOLE	Ⓓ	DRAIN MAN HOLE
● I ROD	IRON ROD	□	CATCH BASIN
FND.	FOUND	UP 7	UTILITY POLE
○○○	STONE WALL	—D—	DRAINAGE
—22—	EXISTING ELEVATION CONTOUR	—W—	WATER
		—S—	SEWER
0/00	ASSESSORS MAP / ASSESSORS PARCEL	—G—	GAS
		—OHW—	OVERHEAD WIRE

22/20
N/F
TOWN OF SALISBURY
BK. 23113 PG 351

S 89°23'34" E — 126.33' — S 88°45'23" E — 115.91' — S 89°31'35" E 81.48' — S 89°40'23" E — 121.23'

213.83' — N 00°43'42" E — 45.52' — N 02°17'52" W — 167.46' — N 00°48'05" E — 94.70' — N 02°39'00" E — 137.57' — N 00°29'55" E — 24.47' — N 02°37'27" W

E.C.L.O. #3054

N/F
BELIEVED TO BE
HEIRS OR ASSIGNS
OF TRUE

22/33
S 01°02'13" W — 531.92'

22/32
S 00°24'14" E — 69.71' — S 02°49'17" W — 111.64' — S 04°38'42" W — 45.41'

OPEN SPACE

(PROPOSED TO BE DEEDED TO TOWN)
404,508 S.F.±
9.29 ACRES±
UPLAND AREA
276,116 S.F.±
6.34 ACRES±
68.3% OF ENTIRE LOT

WIRELESS COMMUNICATION DISTRICT B
ZONE R-1 LOW DENSITY
ZONE R-2 MEDIUM DENSITY

LOT 6
12,667 S.F.±
0.29 ACRES±

N 75°48'01" E 120.22' — S 62°17'12" E 84.34' — N 50°15'03" W 127.78' — N 23°07'23" E 82.89'

LOT 5
10,042 S.F.±
0.23 ACRES±

S 05°21'07" W 148.92' — S 00°14'52" E 97.56' — S 85°15'54" W 92.65' — L=65.00' — L=87.21' R=50.00' — L=24.46' — L=42.78' R=30.00' — L=21.64' — L=13.57' — N 51°36'01" E 140.28'

I. ROD
TO BE SET
(TYP.)

LOT 4
10,115 S.F.±
0.23 ACRES±

S 26°40'03" W 25.73' — L=49.38' — L=41.60' R=30.00' — L=18.91' — L=80.32' — L=66.75' R=110.00'

LOT 3
10,068 S.F.±
0.23 ACRES±

S 48°06'02" W 72.50' — N 88°00'55" E 61.94' — S83°33'26"E 43.06' — 47.88' S66°18'09"E — L=65.43' R=70.00' — L=84.28' R=170.00'

S.B. TO
BE SET
(TYP.)

LOT 7
10,485 S.F.±
0.24 ACRES±

N 85°16'08" E 88.55'

LOT 8
8,378 S.F.±
0.19 ACRES±

S 65°10'58" E 112.29'

PROPOSED 40' R.O.W.
25,127 S.F.±
0.58 ACRES±

33.26' — N74°15'58"W — S 34°39'05" W 42.42' — 33.61' — N 49°40'30" W 62.63' 98.24' — N 86°25'04" E 70.02' — 34.86' — N 56°29'22" E 64.30' — S 56°29'22" W 64.30' — L=30.49' R=20.00' — L=25.84' R=190.00' — L=19.89'

LOT 2
10,452 S.F.±
0.24 ACRES±

S 38°27'10" W 131.56' — N 73°01'34" W 110.06' — L=90.41' R=120.00' — L=32.02' — L=41.61'

LOT 9
13,867 S.F.±
0.32 ACRES±

S 33°58'13" E 89.41' — S 74°11'36" E 90.97' — S 02°56'09" W 287.44'

SHED

LOT 10
26,267 S.F.±
0.60 ACRES±

L=38.02' R=40.00' — S 06°32'50" E 10.04' — L=47.44' R=30.00' — 30.34' — L=123.87' R=220.00' — 224.31' — 56.66' — N 64°52'59" W

LOT 1
14,392 S.F.±
0.33 ACRES±

S 33°37'44" W 59.28' — S 03°33'31" W 84.46' — N 06°32'50" W 11.08' — L=46.81' R=30.00' — L=23.21' — 93.96' — S 82°51'25" W — 100.01'

22/24

FORMERLY BOSTON AND MAINE RAILROAD

N 83°50'06" E 86.30' — N 85°57'23" E — 244.07'

339.89' — 310.00' — N 15°55'45" E — 29.89'

N 87°18'55" W 79.19' — 181.44' — S 87°00'15" W — 154.50' — S 85°24'23" W — L=79.82' L=110.62' R=180.00'

(OLD) GERRISH ROAD

123.07' — N 87°18'55" W — 57.10' — S 87°38'45" W — 147.85' — S 84°13'45" W — N 89°00'06" W 25.44'

GERRISH ROAD

TROUT WAY

GRAPHIC SCALE 40 0 20 40 80 160 (IN FEET) 1 inch = 40'	PREPARED FOR DANIEL S. DESTEFANO 804 HAVERHILL STREET ROWLEY, MA 01969	**PLAN OF LAND** IN **SALISBURY, MA** SHOWING PROPOSED SUBDIVISION AT 9 GERRISH ROAD	**MILLENNIUM ENGINEERING, INC.** ENGINEERING AND LAND SURVEYING 62 ELM ST. SALISBURY, MA 01952 (978) 463-8980 13 HAMPTON RD. EXETER, NH 03833 (603) 778-0528 SCALE: 1"=40' DESG. BY: C.M.Y. DATE: JUN. 18, 2020 CHKD. BY: E.W.B. PROJECT: M193653
			SKETCH PLAN SHEET: C-4

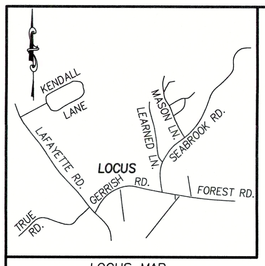

LOCUS MAP
N.T.S.

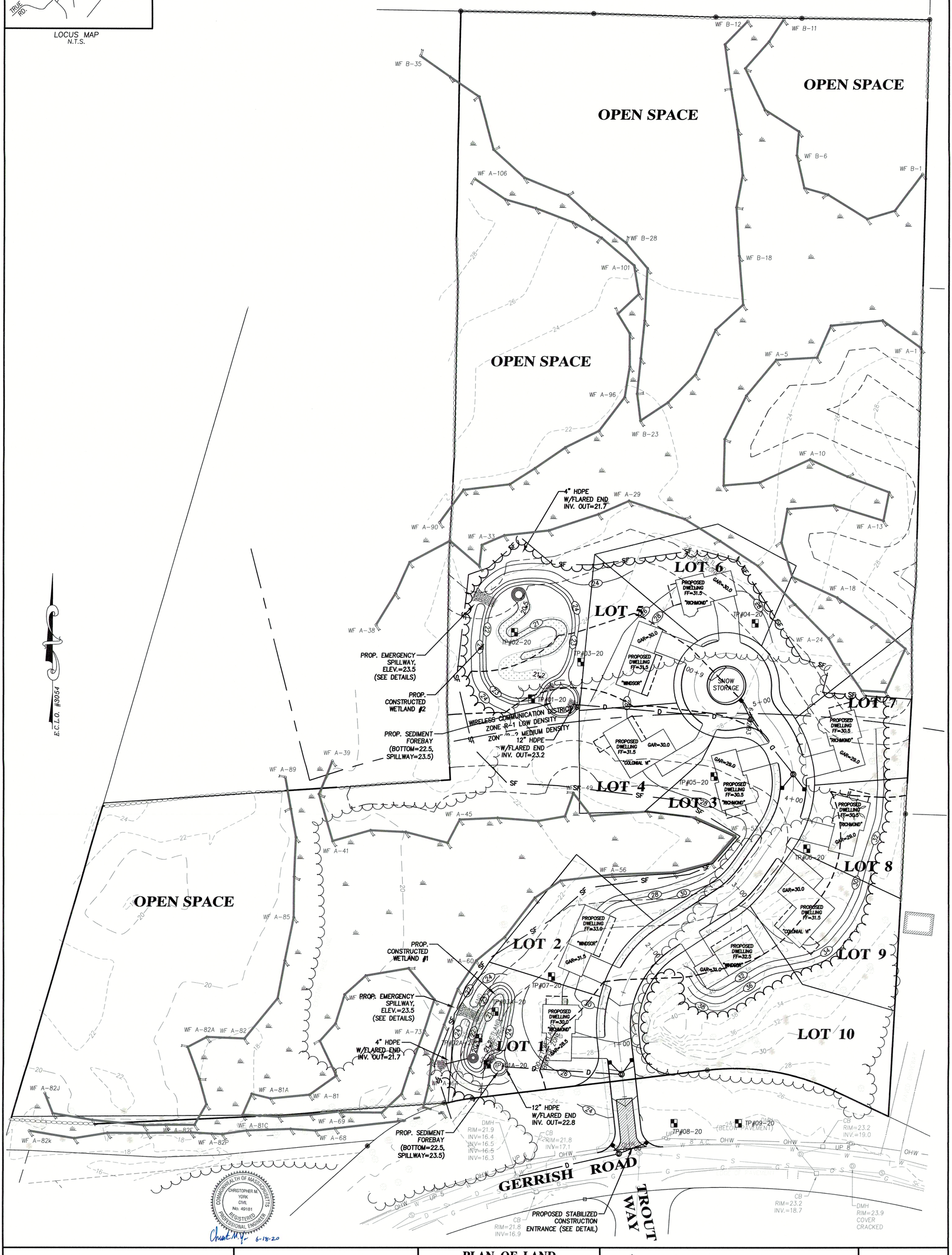

COMMONWEALTH OF MASSACHUSETTS
CHRISTOPHER M. YORK
CIVIL
No. 49187
REGISTERED PROFESSIONAL ENGINEER
6-18-20

GRAPHIC SCALE
40 0 20 40 80 160
(IN FEET)
1 inch = 40'

PREPARED FOR
DANIEL S. DESTEFANO
804 HAVERHILL STREET
ROWLEY, MA 01969

PLAN OF LAND
IN
SALISBURY, MA
SHOWING
PROPOSED SUBDIVISION
AT
9 GERRISH ROAD

MILLENNIUM ENGINEERING, INC.
ENGINEERING AND LAND SURVEYING
62 ELM ST. SALISBURY, MA 01952 (978) 463-8980
13 HAMPTON RD. EXETER, NH 03833 (603) 778-0528

SCALE: 1"=40'	DESG. BY: C.M.Y.	PROJECT: M193653
DATE: JUN. 18, 2020	CHKD. BY: E.W.B.	

GRADING PLAN

SHEET: C-5

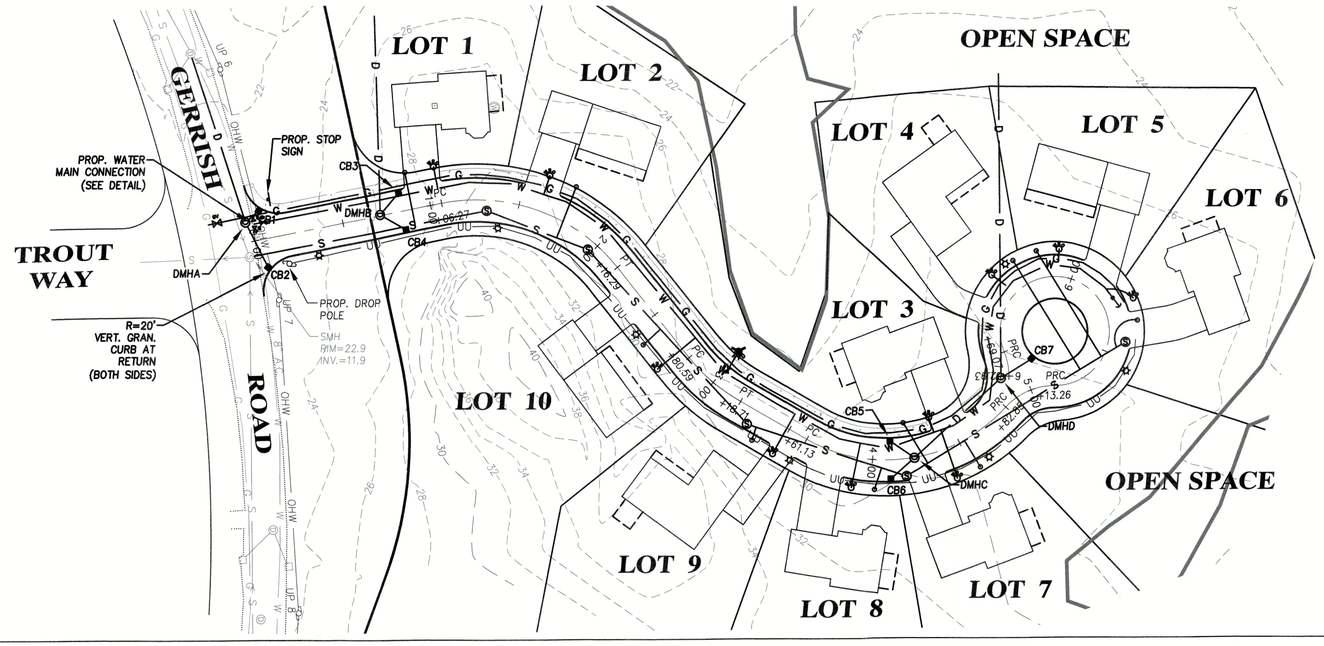

LEGEND

W	EXISTING WATER MAIN
S	EXISTING SEWER MAIN
W	PROPOSED WATER SERVICE
S	PROPOSED SEWER MAIN
SS	PROPOSED SEWER SERVICE
G	PROPOSED GAS MAIN
GS	PROPOSED GAS SERVICE
UU	PROPOSED UNDERGROUND UTILITIES
	EXISTING FIRE HYDRANT
	PROPOSED WATER GATE
	PROPOSED STREET LIGHT
	PROPOSED WATER SHUTOFF
	PROPOSED SEWER SERVICE
	PROPOSED FIRE HYDRANT

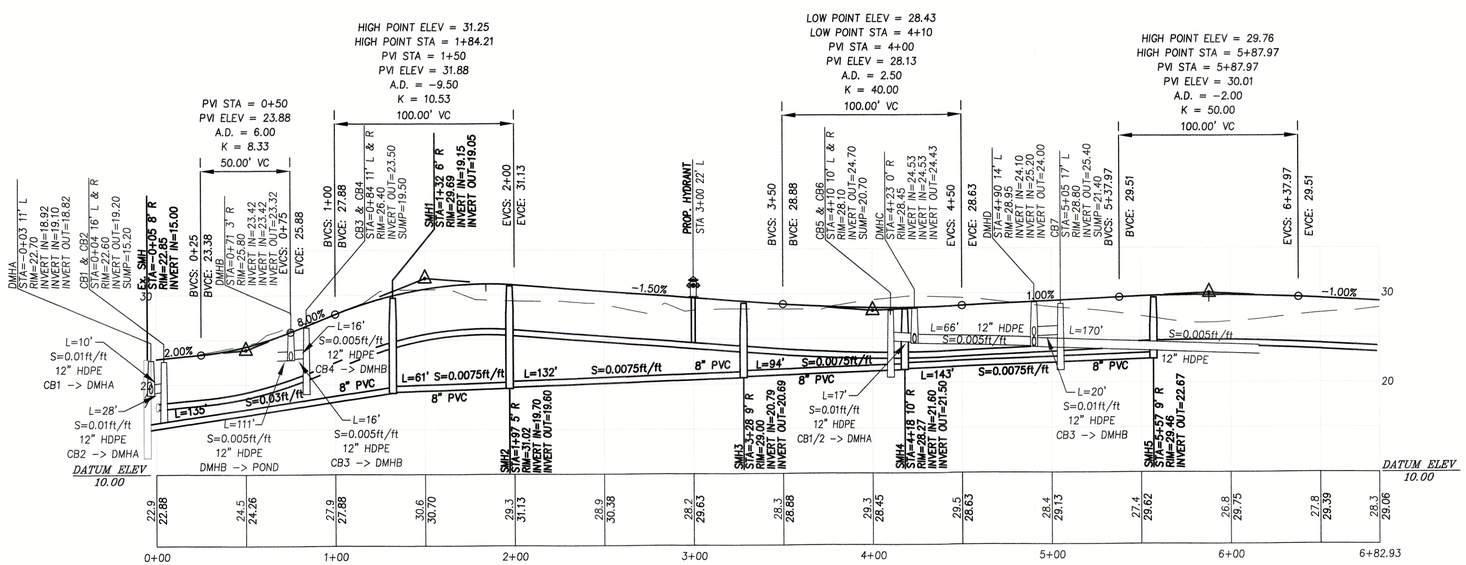

GRAPHIC SCALE

40 0 20 40 80 160

(IN FEET)
1 inch = 40'

COMMONWEALTH OF MASSACHUSETTS
CHRISTOPHER M. YORK
CIVIL
No. 49181
REGISTERED PROFESSIONAL ENGINEER
6-18-20

PREPARED FOR

DANIEL S. DESTEFANO
804 HAVERHILL STREET
ROWLEY, MA 01969

NO.	DATE	DESCRIPTION	BY

MILLENNIUM ENGINEERING, INC.
ENGINEERING AND LAND SURVEYING
62 ELM ST. SALISBURY, MA 01952 (978) 463-8980
13 HAMPTON RD. EXETER, NH 03833 (603) 778-0528

SCALE: 1"=40' | DESG. BY: C.M.Y.
DATE: JUN. 18, 2020 | CHKD. BY: E.W.B.
PROJECT: M193653

SITE PLAN
IN
SALISBURY, MA

SHOWING
PROPOSED SUBDIVISION
AT
9 GERRISH ROAD

UTILITY PLAN & PROFILE

SHEET: C-6

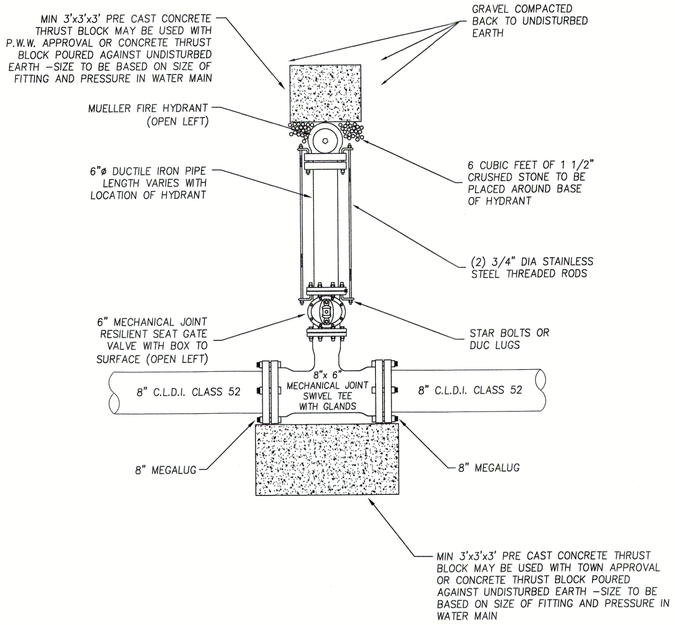

TYPICAL FIRE HYDRANT INSTALLATION

N.T.S.

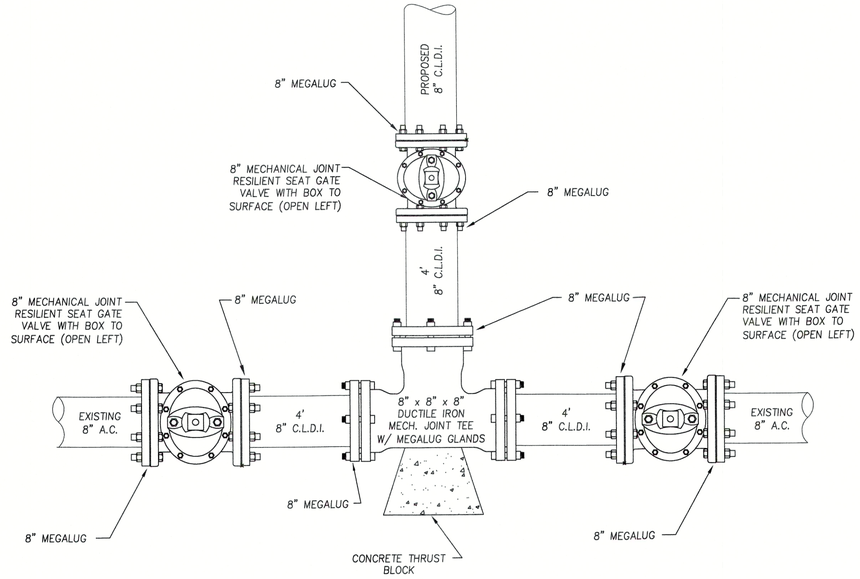

WATER MAIN CONNECTION DETAIL

N.T.S.

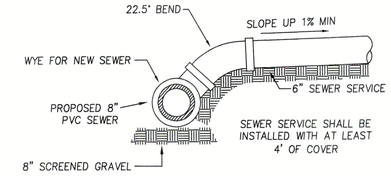

SEWER SERVICE DETAIL

N.T.S.

MATERIAL NOTES

ALL MATERIALS OF THE ELEMENTS IN THE SITE PLAN MUST CONFORM TO THE FOLLOWING STANDARDS:

1. COMMONWEALTH OF MASSACHUSETTS DEPARTMENT OF TRANSPORTATION STANDARD SPECIFICATIONS FOR HIGHWAYS AND BRIDGES (LATEST EDITION)
2. 521 CMR RULES AND REGULATIONS OF THE ARCHITECTURAL ACCESS BOARD (AAB) AND THE AMERICANS WITH DISABILITIES ACT (ADA)
3. SPECIFICATIONS BY THE TOWN OF SALISBURY AS SET FORTH BY SECTION 7 IN THE PLANNING BOARD RULES AND REGULATIONS GOVERNING THE SUBDIVISION OF LAND, DATED DECEMBER 10, 2008
4. UTILITIES INSTALLED PER PENNICHUCK WATER SERVICE CORPORATION SPECIFICATIONS

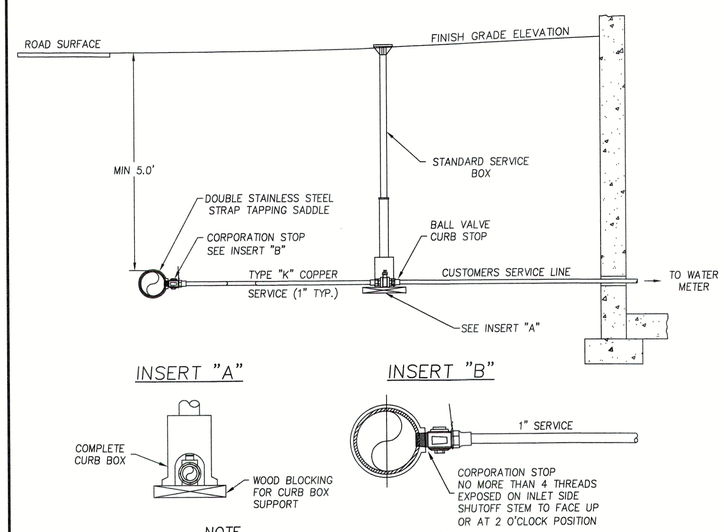

NOTE

1. SERVICE CONNECTIONS FOR THE VARIOUS LOTS SHALL BE SIZED TO MEET THE REQUIREMENTS OF THE SPECIFIED USE. CONNECTIONS TO THE PROJECT WATER MAIN SHALL BE MADE WITH TAPPING SLEEVES AND VALVES.

TYPICAL COPPER SERVICE CONNECTION

N.T.S.

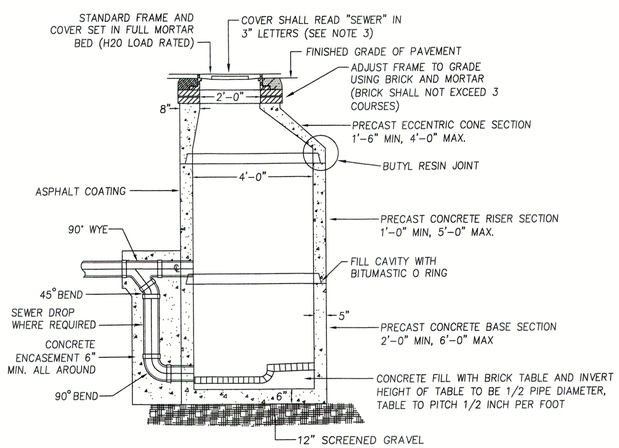

NOTES: 1) SEWER MANHOLES SHALL CONFORM TO ASTM C478 AND ASTM C185
2) STEEL REINFORCED COPOLYMER POLYPROPYLENE PLASTIC STEPS SHALL CONFORM TO LATEST ASTM C478 SPEC.
3) COVER SHALL BE LEBARON FOUNDRY (MODEL NO. LA246), MECHANICS IRON FOUNDRY, NEEHAN FOUNDRY, OR EQUAL.

PRECAST SEWER MANHOLE DETAIL

N.T.S.

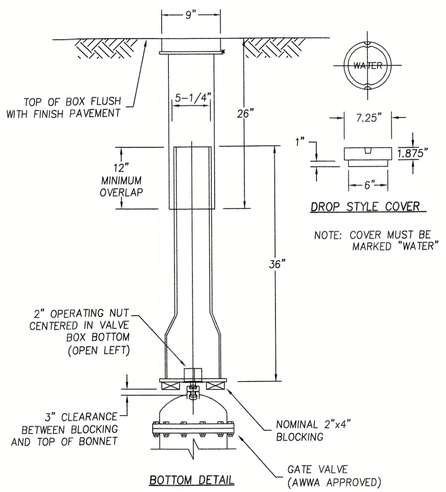

TYPICAL GATE VALVE BOX DETAIL

N.T.S.

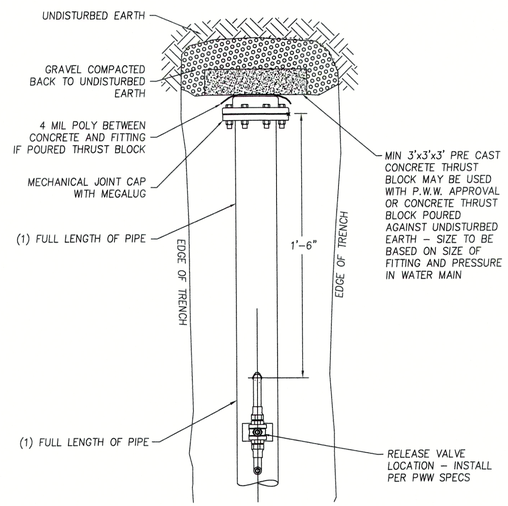

WATER MAIN BLOWOFF DETAIL

N.T.S.

COMMONWEALTH OF MASSACHUSETTS
CHRISTOPHER M. YORK
CIVIL
No. 49181
REGISTERED PROFESSIONAL ENGINEER
6-18-20

PREPARED FOR

DANIEL S. DESTEFANO
804 HAVERHILL STREET
ROWLEY, MA 01969

NO.	DATE	DESCRIPTION	BY

MEI
MILLENNIUM ENGINEERING, INC.
ENGINEERING AND LAND SURVEYING
62 ELM ST. SALISBURY, MA 01952 (978) 463-8980
13 HAMPTON RD. EXETER, NH 03833 (603) 778-0528

SCALE: AS NOTED | DESG. BY: C.M.Y.
DATE: JUN. 18, 2020 | CHKD. BY: E.W.B.
PROJECT: M193653

SITE PLAN
IN
SALISBURY, MA
SHOWING
PROPOSED SUBDIVISION
AT
9 GERRISH ROAD

SITE DETAILS

SHEET: C-7

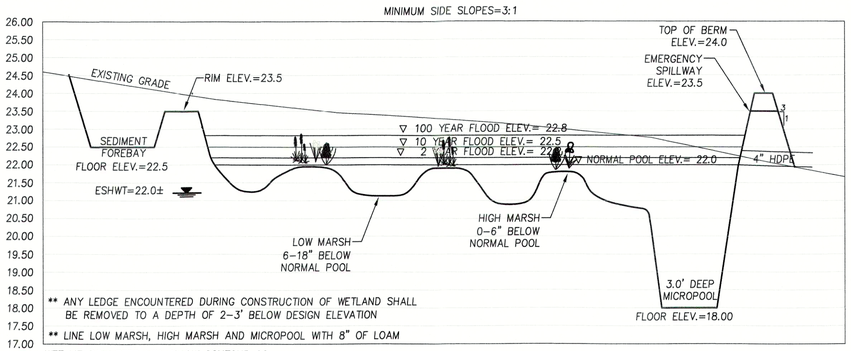

CONSTRUCTED WETLAND #1
PROFILE VIEW

HORIZ. SCALE: N.T.S.
VERT. SCALE: 1"=2'

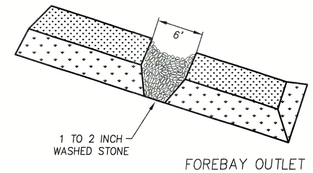

FOREBAY OUTLET

VOLUME OF SEDIMENT FOREBAY

	DRAINAGE AREA (ACRES)	VOLUME (CU. YD)	VOLUME (CU. FT)	DIMENSIONS (L x W x H)	OUTLET LENGTH
FOREBAY #1	0.19	2.5	68	9'x9'x1.0'	6.0'
FOREBAY #2	1.99	26.7	721	27'x27'x1.0'	6.0'

CROSS-SECTION

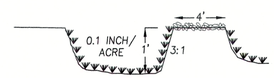

SEDIMENT FOREBAY
DETAIL

N.T.S.

CONSTRUCTED WETLAND PLANT LIST

SYMBOL	COMMON NAME	LATIN NAME	HEIGHT	NUMBER	ZONE
1	SWEET PEPPERBUSH	CLETHRA ALNIFOLIA	3-4'	4	HIGH MARSH/SLOPE
2	NORTHERN ARROWWOOD	VIBURNUM DENTATUM	3-4'	4	HIGH MARSH/LOWER SLOPE
3	WINTERBERRY HOLLY	ILEX VERTICILLATA	3-4'	4 (INCL. 1 MALE)	HIGH MARSH
4	HIGHBUSH BLUEBERRY	VACCINIUM CORYMBOSUM	3-4'	4	HIGH MARSH/LOWER SLOPE
5	RED-OSIER DOGWOOD	CORNUS SERICEA	3-4'	4	HIGH MARSH/LOWER SLOPE
6	BLUE FLAG IRIS	IRIS VERSICOLOR	2" PLUGS	20	HI MARSH/LO MARSH BORDER
7	CARDINAL FLOWER	LOBELIA CARDINALIS	2" PLUGS	20	EDGE HI MARSH/LO MARSH INTO HIGH MARSH
8	SOFT-STEM BULRUSH	SCHOENOPLECTUS TABERNAEMONTANI	2" PLUGS	15	LO SLOPE/MICROPOOL EDGE
9	GREEN BULRUSH	SCIRPUS ATROVIRENS	2" PLUGS	15	MID/LOWER MICROPOOL SLOPE
10	CHAIRMAKER'S BULRUSH	SCHOENOPLECTUS (SCIRPUS) AMERICANUS	2" PLUGS	15	MID/LOWER MICROPOOL SLOPE
11	SWEETFLAG	ACORUS AMERICANUS	2" PLUGS	15	MID/LOWER MICROPOOL SLOPE

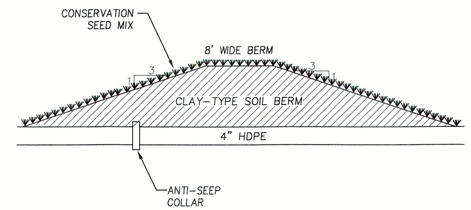

CONSTRUCTED WETLAND
BERM DETAIL

N.T.S.

GENERAL NOTES FOR CONSTRUCTED WETLANDS:

1. WETLAND BERMS SHALL BE CONSTRUCTED OF FILL MATERIAL FREE OF ROOTS, STUMPS, WOOD, RUBBISH, STONES GREATER THAN 6", OR OTHER OBJECTIONABLE MATERIALS. FILL MATERIAL FOR THE CENTER OF THE BERM SHALL CONFORM TO UNIFIED SOIL CLASSIFICATION GC, SC, CH, OR CL AND HAVE AT LEAST 30% PASSING THE #200 SIEVE. MATERIALS USED IN THE OUTER SHELL OF THE BERMS SHALL BE CAPABLE OF SUPPORTING THE VEGETATION SPECIFIED ON THE PLANS.
2. FILL MATERIALS SHALL BE PLACED IN MAXIMUM 8-INCH LIFTS AND COMPACTED WITH A MINIMUM REQUIRED DENSITY OF NOT LESS THAN 95% OF MAXIMUM DRY DENSITY.
3. PRIOR TO FILL MATERIAL INSTALLATION, ALL TOPSOIL, SUBSOIL, AND UNSUITABLE MATERIAL (i.e. LEDGE) SHALL BE REMOVED AND REPLACED WITH SUITABLE MATERIAL.
4. EROSION CONTROL MATTING SHALL BE INSTALLED ON ALL OUTSIDE SLOPES OF STORMWATER BASINS. MATTING SHALL BE A WOVEN JUTE MESH MANUFACTURED BY MACCAFERRI COMPANY, OR APPROVED EQUAL.
5. ALL PIPING WITHIN CONSTRUCTED WETLAND BERMS SHALL INCLUDE ANTI-SEEPAGE COLLARS.

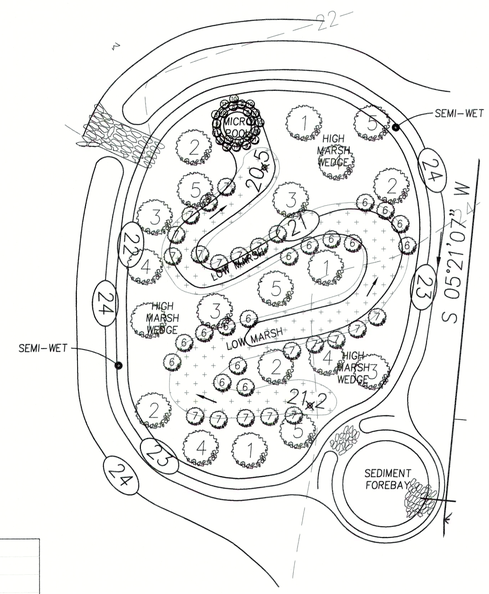

CONSTRUCTED WETLAND
LAYOUT

HORIZ. SCALE: 1"=20'

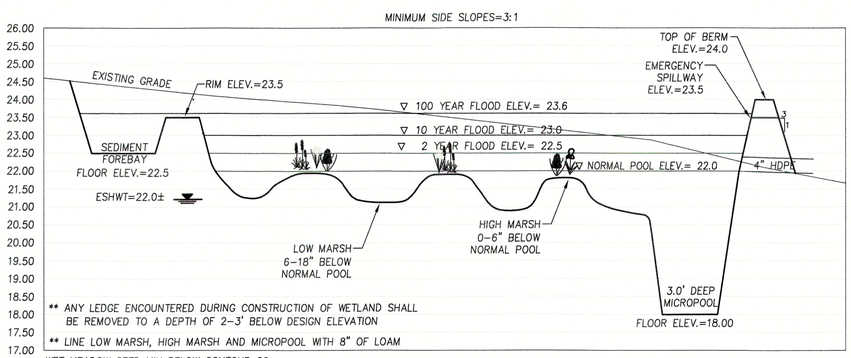

CONSTRUCTED WETLAND #2
PROFILE VIEW

HORIZ. SCALE: N.T.S.
VERT. SCALE: 1"=2'

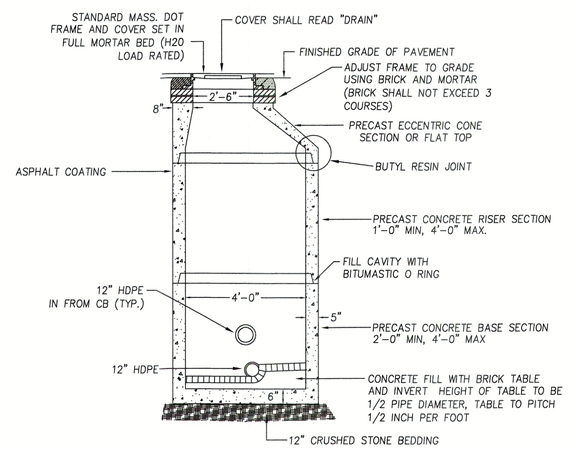

NOTES: 1) DRAIN MANHOLES SHALL CONFORM TO ASTM C478 AND ASTM C185

PRECAST DRAIN
MANHOLE DETAIL

N.T.S.

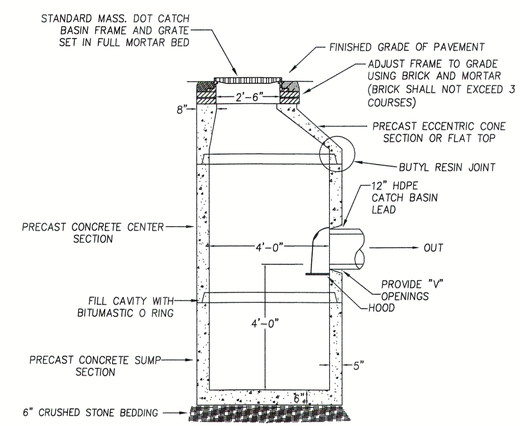

NOTES: 1) CATCH BASINS SHALL CONFORM TO ASTM C478 AND ASTM C185
2) FLAT TOP STRUCTURES SHALL BE PRECAST SECTIONS AND HAVE A 28 DAY COMPRESSIVE STRENGTH OF 5000 PSI REINFORCED FOR AASHTO H-20 LOADING.
3) CONICAL SECTIONS MAY BE SUBSTITUTED FOR FLAT-TOP STRUCTURES IN AREAS WHERE MORE THAN 4 FEET OF COVER IS PROVIDED FOR DRAIN PIPE.

PRECAST DEEP SUMP
CATCH BASIN DETAIL

N.T.S.

COMMONWEALTH OF MASSACHUSETTS
CHRISTOPHER M. YORK
CIVIL
No. 49181
REGISTERED PROFESSIONAL ENGINEER
6-18-20

PREPARED FOR

DANIEL S. DESTEFANO
804 HAVERHILL STREET
ROWLEY, MA 01969

NO.	DATE	DESCRIPTION	BY

MEI
MILLENNIUM ENGINEERING, INC.
ENGINEERING AND LAND SURVEYING
62 ELM ST. SALISBURY, MA 01952 (978) 463-8980
13 HAMPTON RD. EXETER, NH 03833 (603) 778-0528

SCALE: AS NOTED | DESG. BY: C.M.Y.
DATE: JUN. 18, 2020 | CHKD. BY: E.W.B.
PROJECT: M193653

SITE PLAN
IN
SALISBURY, MA
SHOWING
PROPOSED SUBDIVISION
AT
9 GERRISH ROAD

DRAINAGE DETAILS

SHEET: C-8

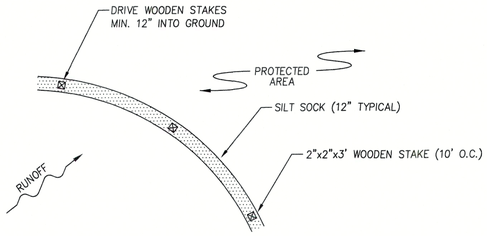

NOTES

1. ALL MATERIAL SHALL MEET SPECIFICATIONS BY FILTREXX OR APPROVED EQUAL.
2. SILT SOCK SHALL BE INSPECTED WITHIN 24 HOURS AFTER EACH RAINFALL AND AT LEAST DAILY DURING PROLONGED RAINFALL. ANY REPAIRS THAT ARE REQUIRED SHALL BE MADE IMMEDIATELY.
3. THE CONTRACTOR SHALL REMOVE SEDIMENT AT THE BASE OF THE UPSLOPE SIDE OF THE SILT SOCK WHEN ACCUMULATION HAS REACHED 1/2 OF THE EFFECTIVE HEIGHT OF THE SILT SOCK.
4. SILT SOCK SHALL BE MAINTAINED UNTIL DISTURBED AREA ABOVE THE DEVICE HAS BEEN PERMANENTLY STABILIZED AND CONSTRUCTION ACTIVITY HAS BEEN COMPLETED.
5. SEDIMENT DEPOSITS THAT ARE REMOVED OR LEFT IN PLACE AFTER THE SOCK HAS BEEN REMOVED SHALL BE GRADED TO CONFORM WITH THE EXISTING TOPOGRAPHY AND VEGETATED.

SILT SOCK INSTALLATION

N.T.S.

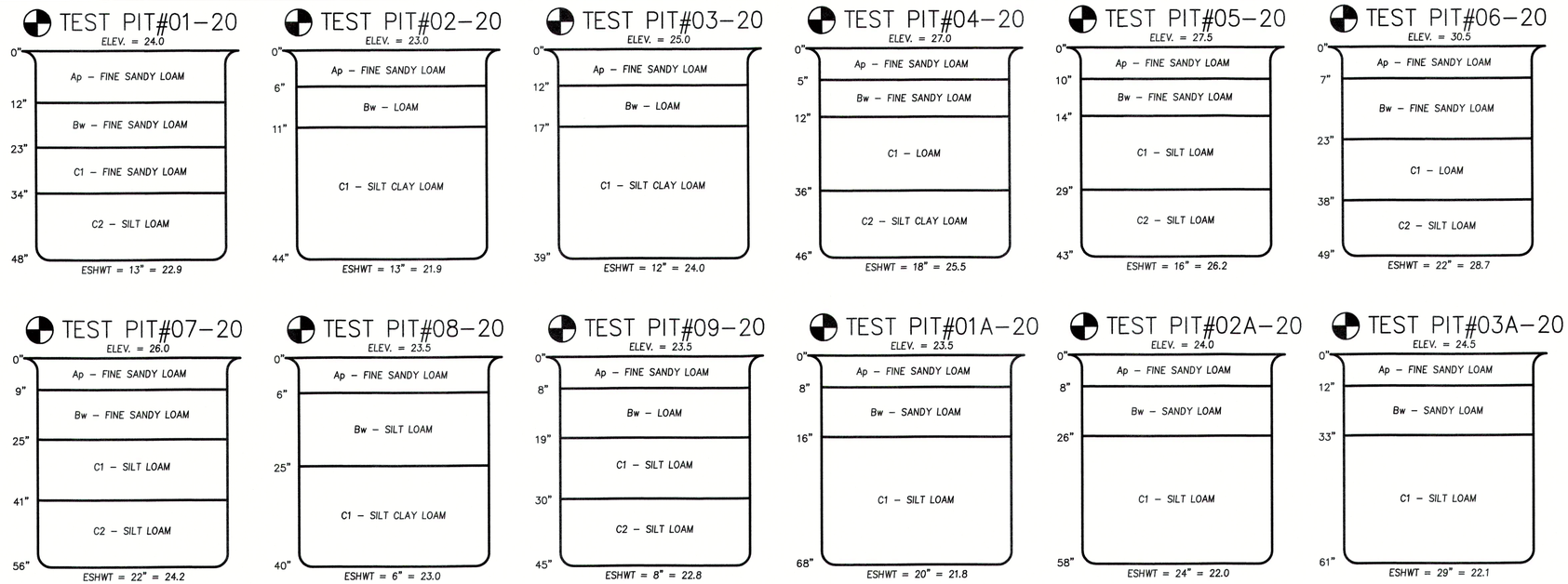

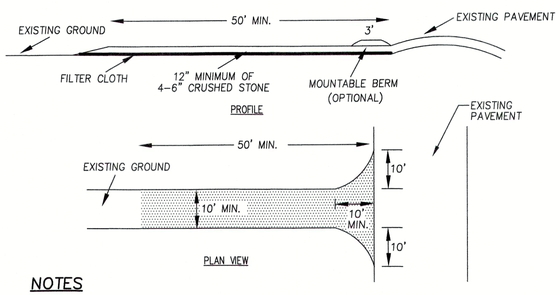

NOTES

1. STONE SHALL BE 4–6" STONE, RECLAIMED STONE, OR RECYCLED CONCRETE EQUIVALENT.
2. THE LENGTH OF THE STABILIZED ENTRANCE SHALL NOT BE LESS THAN 50'.
3. THE THICKNESS OF THE STONE FOR THE STABILIZED ENTRANCE SHALL NOT BE LESS THAN 12".
4. GEOTEXTILE FILTER CLOTH SHALL BE PLACED OVER THE ENTIRE AREA PRIOR TO PLACING THE STONE.
5. ALL SURFACE WATER THAT IS FLOWING TO OR DIVERTED TOWARD THE CONSTRUCTION ENTRANCE SHALL BE PIPED BENEATH THE ENTRANCE. IF PIPING IS IMPRACTICAL, A BERM WITH 5:1 SLOPES THAT CAN BE CROSSED BY VEHICLES MAY BE SUBSTITUTED FOR THE PIPE.
6. THE ENTRANCE SHALL BE MAINTAINED IN A CONDITION THAT WILL PREVENT TRACKING OR FLOWING OF SEDIMENT ONTO PUBLIC RIGHTS–OF–WAY. THIS MAY REQUIRE PERIODIC TOP–DRESSING WITH ADDITIONAL STONE AS CONDITIONS DEMAND AND REPAIR AND/OR CLEANOUT OF ANY MEASURES USED TO TRAP SEDIMENT. ALL SEDIMENT SPILLED, WASHED, OR TRACKED ONTO PUBLIC RIGHTS–OF–WAY MUST BE REMOVED PROMPTLY.
7. WHEELS SHALL BE CLEANED TO REMOVE MUD PRIOR TO ENTRANCE ONTO PUBLIC RIGHTS–OF–WAY. WHEN WASHING IS REQUIRED, IT SHALL BE DONE ON AN AREA STABILIZED WITH STONE WHICH DRAINS INTO AN APPROVED SEDIMENT TRAPPING DEVICE.

STABILIZED CONSTRUCTION ENTRANCE

N.T.S.

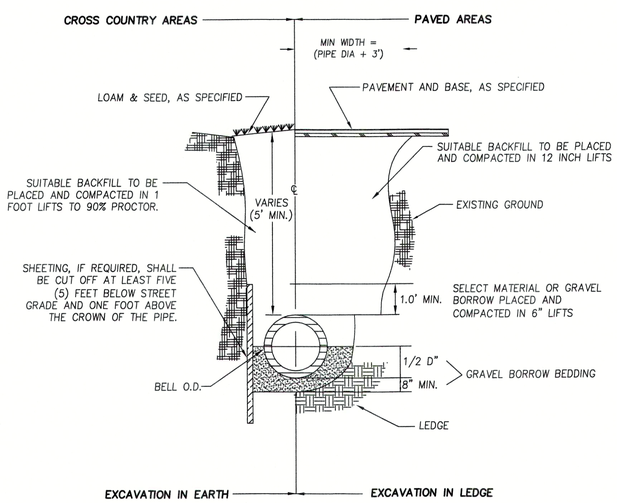

TYPICAL TRENCH DETAIL

N.T.S.

GENERAL EROSION CONTROL NOTES

1. ALL EROSION CONTROL SHALL BE INSTALLED BEFORE THE START OF CONSTRUCTION. EROSION CONTROL SHALL BE REMOVED UPON COMPLETION OF THE PROJECT AND STABILIZATION OF ALL SOIL.
2. ALL FILL SHALL BE FREE OF STUMPS AND LARGE STONES.
3. ANY STANDING BODIES OF WATER CREATED DURING EXCAVATION SHALL BE ELIMINATED.
4. EROSION CONTROL BARRIERS SHALL BE INSPECTED WEEKLY AND AFTER EVERY 0.5" OF RAINFALL AND PROMPTLY REPAIRED OR REPLACED AS NECESSARY.
5. ACCUMULATED SEDIMENT DEPOSITS UPSTREAM OF BARRIERS SHALL BE PROPERLY DISPOSED OF ON A REGULAR BASIS.
6. AREAS OUTSIDE THE LIMITS OF WORK (EROSION CONTROL/SILT FENCE LOCATIONS) DISTURBED BY THE CONTRACTOR DURING CONSTRUCTION SHALL BE RESTORED TO THEIR ORIGINAL CONDITION AT THE EXPENSE OF THE CONTRACTOR.
7. THE CONTRACTOR IS RESPONSIBLE FOR MAINTAINING EROSION AND/OR SEDIMENT CONTROLS DURING CONSTRUCTION. HE/SHE SHALL INSPECT CONTROLS WEEKLY AND AFTER ALL STORM EVENTS. REPAIRS, IF REQUIRED, SHALL BE MADE IMMEDIATELY.
8. TEMPORARY GROUND COVER SHALL BE ESTABLISHED IN AREAS OF CONSTRUCTION WHERE REQUIRED BY THE SALISBURY CONSERVATION COMMISSION.
9. ANY DISTURBED AREAS OF THE SITE NOT USED FOR ROADWAY OR UTILITY CONSTRUCTION SHALL BE STABILIZED WITH LOAM AND SEED UNTIL FURTHER DISTURBANCE IS REQUIRED FOR BUILDING CONSTRUCTION.
10. PROVIDE GRAVEL AND WIRE MESH SEDIMENT FILTER AT ALL CATCH BASINS.
11. A MINIMUM OF 6" OF LOAM SHALL BE INSTALLED ON ALL DISTURBED UNPAVED SURFACES.
12. PERMANENT SEED MIX SHALL BE MA STATE SLOPE MIXTURE (50% CREEPING RED FESCUE, 30% KENTUCKY 31 TALL FESCUE, 10% ANNUAL RYEGRASS, 5% RED TOP, 5% LADINO CLOVER) AND MA STATE PLOT MIXTURE (50% CREEPING RED FESCUE, 25% 85/80 KENTUCKY BLUEGRASS, 10% ANNUAL RYEGRASS, 10% RED TOP, 5% LADINO CLOVER)
13. NO MORE THAN 3 ACRES SHALL BE DISTURBED AT ONE TIME. ALL AREAS SHALL BE STABILIZED WITHIN 45 DAYS OF INITIAL DISTURBANCE.
14. WHERE PLACEMENT OF FILL IS REQUIRED FOR STORM WATER CONTROL, FILL SHALL BE PLACED IN AN UNFROZEN STATE UPON UNFROZEN GROUND. UNDER NO CIRCUMSTANCES SHALL FILL BE PLACED FROM NOVEMBER THROUGH JANUARY.
15. AN AREA SHALL BE CONSIDERED STABLE IF ONE OF THE FOLLOWING HAS OCCURRED: BASE COURSE GRAVELS HAVE BEEN INSTALLED IN AREAS TO BE PAVED; A MINIMUM OF 85% VEGETATED GROWTH HAS BEEN ESTABLISHED; A MINIMUM OF 3" OF NON–EROSIVE MATERIAL SUCH AS STONE OR RIPRAP HAS BEEN INSTALLED; OR EROSION CONTROL BLANKETS HAVE BEEN PROPERLY INSTALLED.
16. ALL PROPOSED VEGETATED AREAS WHICH DO NOT EXHIBIT A MINIMUM OF 85% VEGETATIVE GROWTH BY OCT. 15TH, OR WHICH ARE DISTURBED AFTER OCT. 15TH, SHALL BE STABILIZED BY SEEDING AND INSTALLING EROSION CONTROL BLANKETS ON SLOPES GREATER THAN 3:1, AND SEEDING AND PLACING 3 TO 4 TONS OF MULCH PER ACRE, SECURED WITH ANCHORED NETTING, ELSEWHERE. THE INSTALLATION OF EROSION CONTROL BLANKETS OR MULCH AND NETTING SHALL NOT OCCUR OVER ACCUMULATED SNOW OR ON FROZEN GROUND AND SHALL BE COMPLETED IN ADVANCE OF THAW OR SPRING MELT EVENTS.
17. ALL DITCHES OR SWALES WHICH DO NOT EXHIBIT A MINIMUM OF 85% VEGETATIVE GROWTH BY OCT. 15TH, OR WHICH ARE DISTURBED AFTER OCT. 15TH, SHALL BE STABILIZED TEMPORARILY WITH STONE OR EROSION CONTROL BLANKETS APPROPRIATE FOR THE DESIGN FLOW CONDITIONS.

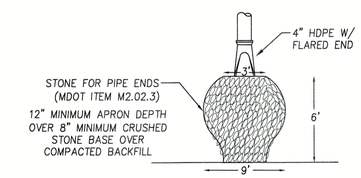

NOTE: GEOSYNTHETIC EROSION CONTROL MAT SHALL BE UNDER ALL RIP–RAP

TYPICAL RIP–RAP APRON DETAIL

N.T.S.

CONSTRUCTION SEQUENCE

1. INSTALL EROSION CONTROL AT LIMIT OF WORK & STAKE OUT STORMWATER AREAS
2. CONSTRUCT STABILIZED CONSTRUCTION ENTRANCE AS DEPICTED.
3. CLEAR AND GRUB DEBRIS TO PHASE LINE AND DISPOSE OF PROPERLY.
4. STRIP, SCREEN AND STOCKPILE TOPSOIL. TOPSOIL CAN BE TEMPORARILY STOCKPILED ON SITE PROVIDING THAT THE PERIMETER OF THE STOCKPILES ARE PROPERLY STAKED WITH SILT FENCE AT THE TOE OF SLOPE.
5. REMOVE EXISTING BUILDING.
6. ROUGH GRADE CONSTRUCTED WETLAND.
7. GRADE PAVEMENT TO TOP OF SUBGRADE ELEVATIONS. ALL ROADWAYS MUST BE STABILIZED IMMEDIATELY AFTER GRADING.
8. BEGIN BUILDING CONSTRUCTION.
9. INSTALL UTILITIES/DRAINAGE STRUCTURES.
10. PLACE RIPRAP WHERE SHOWN ON PLANS. LOAM AND HYDROSEED SIDESLOPES AND ALL DISTURBED AREAS WITHIN 72 HOURS.
11. ADD PLANTINGS TO CONSTRUCTED WETLAND.
12. SPREAD, SHAPE, AND COMPACT PAVEMENT SUBBASE AS PER TYPICAL PAVEMENT SECTION TO ATTAIN FINAL DESIGN ELEVATIONS.
13. PERFORM BINDER COURSE PAVING.
14. LOAM AND HYDROSEED ANY DISTURBED SURFACES ALONG EDGES OF PAVEMENT AS REQUIRED.
15. PERFORM FINAL PAVING (TOP COURSE).
16. REMOVE EROSION CONTROL.

COMMONWEALTH OF MASSACHUSETTS
CHRISTOPHER M. YORK
CIVIL
No. 49181
REGISTERED PROFESSIONAL ENGINEER
Christ M. York 6-18-20

PREPARED FOR

DANIEL S. DESTEFANO
804 HAVERHILL STREET
ROWLEY, MA 01969

NO.	DATE	DESCRIPTION	BY

MEI
MILLENNIUM ENGINEERING, INC.
ENGINEERING AND LAND SURVEYING
62 ELM ST. SALISBURY, MA 01952 (978) 463–8980
13 HAMPTON RD. EXETER, NH 03833 (603) 778–0528

SCALE: AS NOTED | DESG. BY: C.M.Y.
DATE: JUN. 18, 2020 | CHKD. BY: E.W.B.
PROJECT: M193653

SITE PLAN
IN
SALISBURY, MA
SHOWING
PROPOSED SUBDIVISION
AT
9 GERRISH ROAD

EROSION CONTROL DETAILS

SHEET: C–9

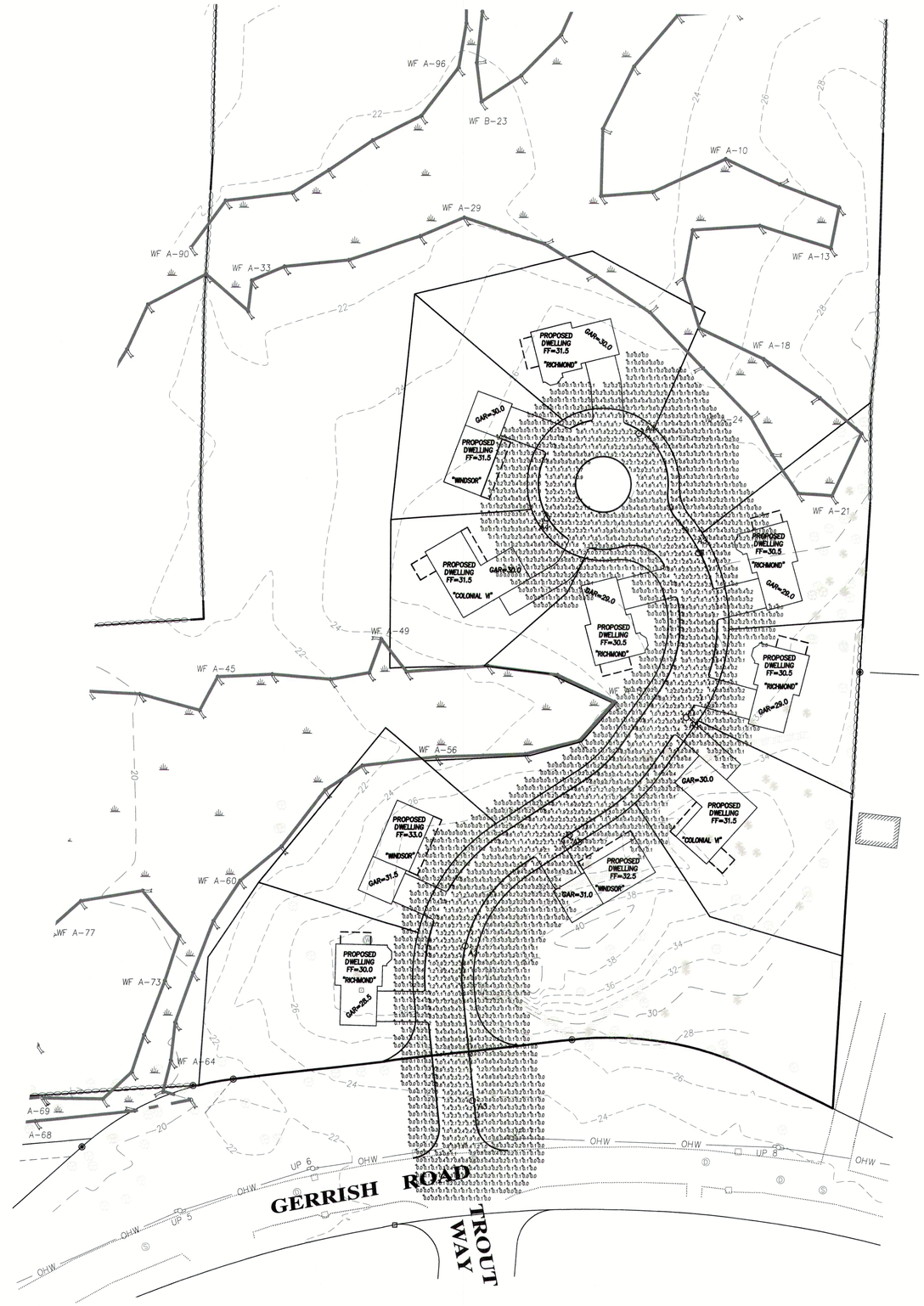

E.C.L.O. #3054

Schedule											
Symbol	Label	Quantity	Manufacturer	Catalog Number	Description	Lamp	Number Lamps	Filename	Lumens Per Lamp	Light Loss Factor	Wattage
	A3	5	Sternberg Lighting	1A 1970LED S BF 4ARC35T3R MDL03 FG	1970 Gallery Fixture; mounted at 14ft	LED	1	1970LED-4ARC45T3R-MDL03-FG.IES	6701	0.9	64.7
	A4	2	Sternberg Lighting	1A 1970LED S BF 4ARC35T4 MDL03 FG	1970 Gallery Fixture; mounted at 14ft	LED	1	1970LED-4ARC45T4-MDL03-FG.IES	6705	0.9	64.5

Statistics						
Description	Symbol	Avg	Max	Min	Max/Min	Avg/Min
Outside of Roadway	+	0.3 fc	3.6 fc	0.0 fc	N/A	N/A
Roadway	+	1.5 fc	4.3 fc	0.2 fc	21.5:1	7.5:1

Site Lighting Layout At 9 GERRISH ROAD

Designer
Heidi G. Connors Visible Light, Inc. 24 Stickney Terrace Suite 6 Hampton, NH 03842
Date
6/18/2020
Scale
1"=40'
Drawing No.
Summary

E-1

STREET TREE OPTIONS: QTY 28

ACER RUBRUM	RED MAPLE	2.5-3" CAL.
CARPINUS BETULUS	COMMON HORNBEAM	2.5-3" CAL.
NYSSA SYLVATICA	SWEETGUM	2.5-3" CAL.
QUERCUS PALUSTRIS	PIN OAK	2.5-3" CAL.

EVERGREEN TREE OPTIONS: QTY 13

ABIES CONCOLOR	WHITE FIR	8-10' HT.
PICEA ABIES	NORWAY SPRUCE	8-10' HT.
PINUS FLEXILIS	LIMBER PINE	8-10' HT.

EVERGREEN BUFFER OPTIONS: QTY 11

JUNIPERUS 'MOONGLOW'	JUNIPER	6-8' HT.
THUJA PLICATA	ARBORVITAE	6-8' HT.

FLOWERING TREE OPTIONS: QTY 30

AMELANCHIER CANADENSIS	SERVICEBERRY	2" CAL.
CORNUS FLORIDA	FLOWERING DOGWOOD	2" CAL.
PRUNUS X YEDOENSIS	YOSHINO CHERRY	2" CAL.

LARGE SHRUB OPTIONS: QTY 70

CORNUS ALBA 'BAILHALO'	IVORY HALO DOGWOOD	5 GAL.
HYDRANGEA P. 'QUICKFIRE'	PANICLE HYDRANGEA	5 GAL.
ILEX GLABRA 'SHAMROCK'	INKBERRY HOLLY	5 GAL.
RHODODENDRON 'ALBA'	RHODODENDRON	5 GAL.
VIBURNUM 'MOHAWK'	VIBURNUM	3-4' HT.

SMALL SHRUB OPTIONS: QTY 58

AZALEA 'DEL VALLEY WHITE'	AZALEA	3 GAL.
HYDRANGEA 'END. SUMMER'	HYDRANGEA	3 GAL.
ROSA 'KNOCKOUT'	ROSE	3 GAL.
SPIREA 'SHIROBANA'	SPIREA	3 GAL.
SYRINGA MEYERI 'PALABIN'	DWARF KOREAN LILAC	3 GAL.

Issued:		
1	5-28-20	For review
2	6-11-20	For review

LANDSCAPE PLAN

Scale: 1"=40'-0"

9 GERRISH RD.
OSRD
Salisbury, MA

KDTurner Design
landscape architecture

27 High St.
Newburyport, MA 01950

ph) 781-632-6004

L-1

STREET TREE OPTIONS: QTY 28

ACER RUBRUM	RED MAPLE	2.5-3" CAL.
CARPINUS BETULUS	COMMON HORNBEAM	2.5-3" CAL.
NYSSA SYLVATICA	SWEETGUM	2.5-3" CAL.
QUERCUS PALUSTRIS	PIN OAK	2.5-3" CAL.

EVERGREEN TREE OPTIONS: QTY 13

ABIES CONCOLOR	WHITE FIR	8-10' HT.
PICEA ABIES	NORWAY SPRUCE	8-10' HT.
PINUS FLEXILIS	LIMBER PINE	8-10' HT.

EVERGREEN BUFFER OPTIONS: QTY 11

JUNIPERUS 'MOONGLOW'	JUNIPER	6-8' HT.
THUJA PLICATA	ARBORVITAE	6-8' HT.

FLOWERING TREE OPTIONS: QTY 30

AMELANCHIER CANADENSIS	SERVICEBERRY	2" CAL.
CORNUS FLORIDA	FLOWERING DOGWOOD	2" CAL.
PRUNUS X YEDOENSIS	YOSHINO CHERRY	2" CAL.

LARGE SHRUB OPTIONS: QTY 70

CORNUS ALBA 'BAILHALO'	IVORY HALO DOGWOOD	5 GAL.
HYDRANGEA P. 'QUICKFIRE'	PANICLE HYDRANGEA	5 GAL.
ILEX GLABRA 'SHAMROCK'	INKBERRY HOLLY	5 GAL.
RHODODENDRON 'ALBA'	RHODODENDRON	5 GAL.
VIBURNUM 'MOHAWK'	VIBURNUM	3-4' HT.

SMALL SHRUB OPTIONS: QTY 58

AZALEA 'DEL VALLEY WHITE'	AZALEA	3 GAL.
HYDRANGEA 'END. SUMMER'	HYDRANGEA	3 GAL.
ROSA 'KNOCKOUT'	ROSE	3 GAL.
SPIREA 'SHIROBANA'	SPIREA	3 GAL.
SYRINGA MEYERI 'PALABIN'	DWARF KOREAN LILAC	3 GAL.

Issued:

1	5-28-20	For review
2	6-11-20	For review

LANDSCAPE PLAN

Scale: 1"=40'-0"

9 GERRISH RD.
OSRD
Salisbury, MA

KDTurner Design
landscape architecture

27 High St.
Newburyport, MA 01950

ph) 781-632-6004

L-1