14–UNIT RESIDENTIAL DEVELOPMENT (LOTS 249–258) AND 2 RESIDENTIAL LOTS (LOTS 259 & 260)

AT

207 BEACH ROAD

IN

SALISBURY, MA

MARCH 2022

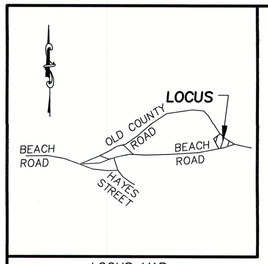

LOCUS MAP
N.T.S.

SALISBURY PLANNING BOARD APPROVAL

DATE

OWNER OF RECORD

28
10

IDA P. & EDWARD FOOTE, JR.
123 CENTRAL AVENUE
SALISBURY, MA
BOOK 10016 PAGE 248

TOTAL AREA
53,071 S.F.
1.22 ACRES

UPLAND AREA
46,920 S.F.±
1.08 ACRES±
(88.4% OF LOT)

PLAN BOOK 218 PLAN 91

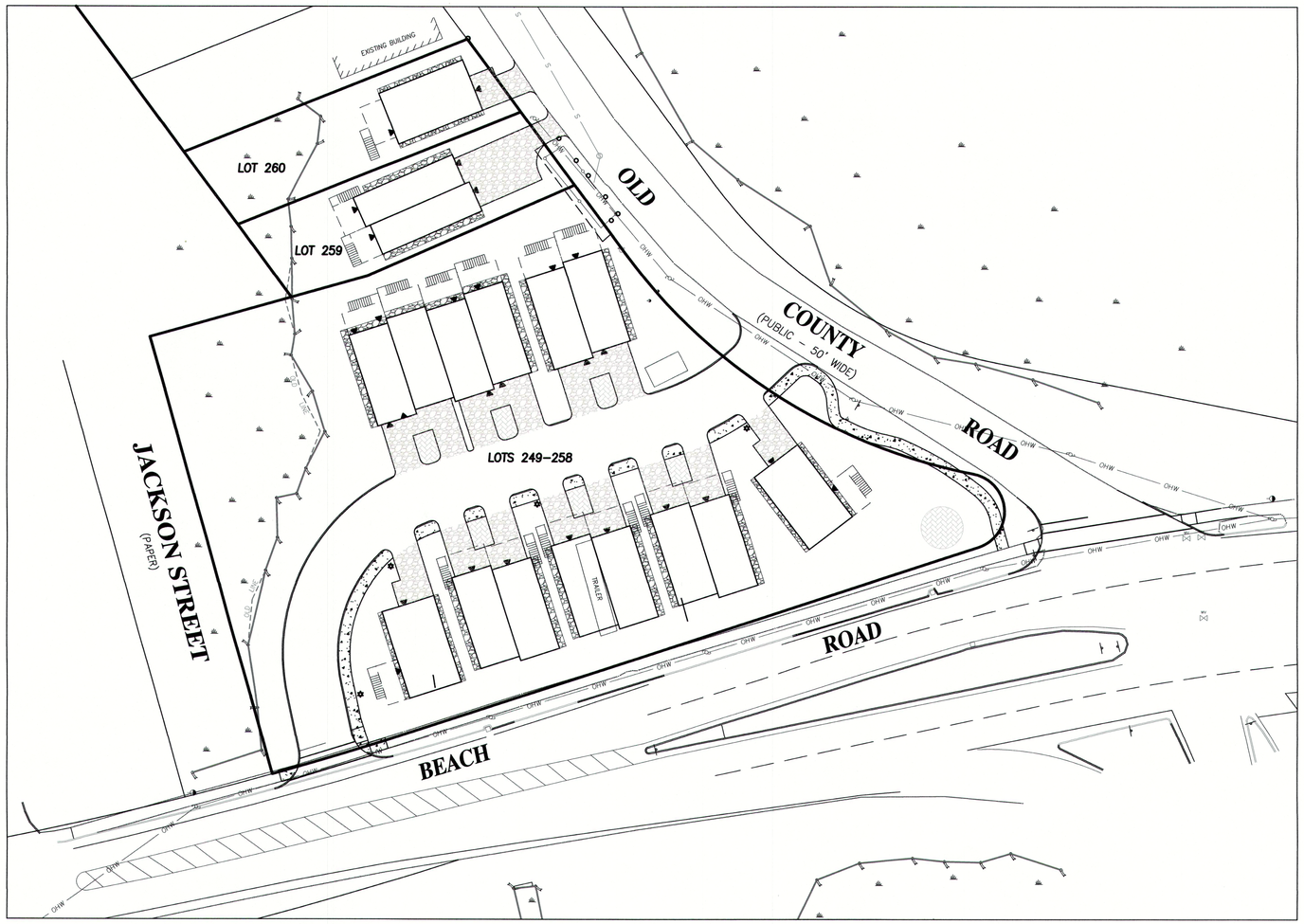

PLAN INDEX

SHEET NO.	TITLE
C–1	COVER SHEET
C–2	EXISTING CONDITIONS PLAN
C–3	LEGEND/NOTES
C–4	GRADING PLANS
C–5	UTILITY PLAN & PROFILE
C–6	UTILITY DETAILS
C–7	DRAINAGE DETAILS
C–8	EROSION CONTROL DETAILS
E–1	LIGHTING PLAN
F–1	FIRE TRUCK TEMPLATE
L–1	LANDSCAPE PLAN

ZONING TABLE

207 BEACH ROAD – ASSESSORS MAP 28 LOT 10
ZONING DISTRICT BC–RES

	REQUIRED	EXISTING	PROPOSED
LOT AREA:	–	1.22 ACRES	1.22 ACRES
LOT FRONTAGE:	–	327.96 FEET	327.96 FEET
FRONT SETBACK:	5 FEET	–	14.3 FT
SIDE SETBACK:	**	–	7.6 FT
REAR SETBACK:	**	–	20.9 FT
LOT COVERAGE:	90% MAX	0%	20.7%
BLDG HEIGHT:	35 FEET	–	< 35 FEET
PARKING SPACES:	2 PER UNIT	–	3 PER UNIT

** THE SETBACK REQUIREMENTS SHALL BE BASED ON 10'–0" FOR NON–FIRE–RATED STRUCTURES AND 5'–0" FOR FIRE–RESISTANT STRUCTURES.

LOT COVERAGE CALCULATIONS: 10,992 S.F. BUILDINGS/53,071 S.F. LOT=20.7%

NOTES

1. THE PROPERTY IS LOCATED WITHIN THE TOWN OF SALISBURY FLOOD PLAIN DISTRICT.
2. THE PROPERTY LIES WITHIN THE 100–YEAR FLOOD PLAIN (ZONE AE, ELEV. 9) ACCORDING TO F.I.R.M. COMMUNITY PANEL NUMBER 25009C 0129F.

GRAPHIC SCALE
30 0 15 30 60 120
(IN FEET)
1 inch = 30'

COMMONWEALTH OF MASSACHUSETTS
CHRISTOPHER M. YORK
CIVIL
No. 49181
REGISTERED PROFESSIONAL ENGINEER
3-17-22

PREPARED FOR

TOM PATENAUDE
P.O. BOX 5
NORTH ANDOVER, MA 01845

NO.	DATE	DESCRIPTION	BY
8	3/17/22	ADDRESS REVIEWER'S COMMENTS	C.M.Y.
7	3/3/22	ADDRESS REVIEWER'S COMMENTS	C.M.Y.
6	2/17/22	ADDRESS REVIEWER'S COMMENTS	C.M.Y.
5	1/31/22	ADDRESS REVIEWER'S COMMENTS	C.M.Y.
4	1/3/22	ADDRESS REVIEWER'S COMMENTS	C.M.Y.
3	8/5/21	ADDRESS REVIEWER'S COMMENTS	C.M.Y.
2	7/22/21	ADDRESS REVIEWER'S COMMENTS	C.M.Y.

MILLENNIUM ENGINEERING, INC.
ENGINEERING AND LAND SURVEYING
62 ELM ST. SALISBURY, MA 01952 (978) 463–8980
13 HAMPTON RD. EXETER, NH 03833 (603) 778–0528

SCALE: 1"=30'
DATE: JUN. 3, 2021
DESG. BY: C.M.Y.
CHKD. BY: E.W.B.
PROJECT: M203759

SITE PLAN
IN
SALISBURY, MA
SHOWING
PROPOSED SITE DEVELOPMENT
AT
207 BEACH ROAD (LOTS 249–258)

COVER SHEET

SHEET: C–1

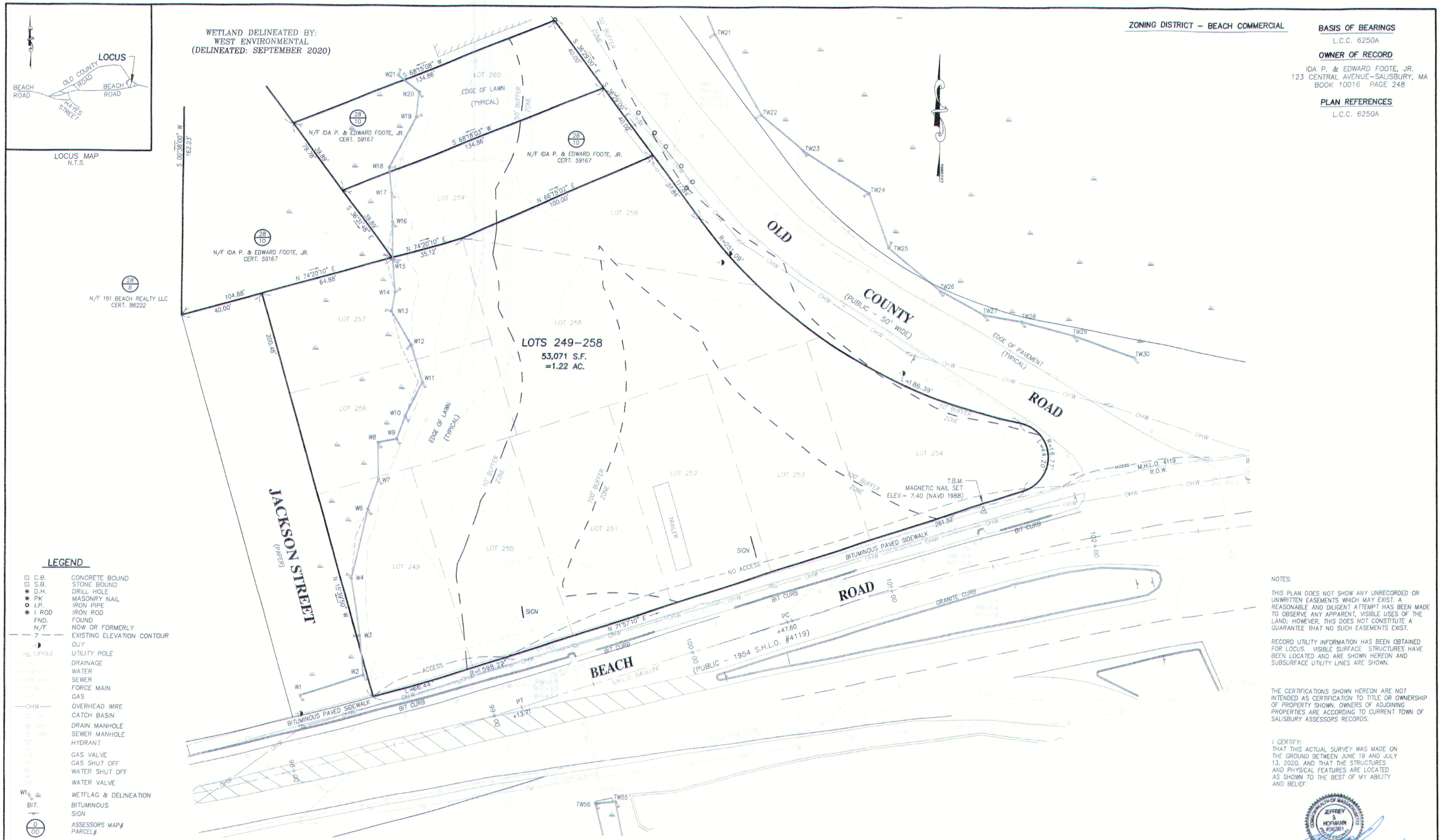

NOTES:

THIS PLAN DOES NOT SHOW ANY UNRECORDED OR UNWRITTEN EASEMENTS WHICH MAY EXIST. A REASONABLE AND DILIGENT ATTEMPT HAS BEEN MADE TO OBSERVE ANY APPARENT, VISIBLE USES OF THE LAND; HOWEVER, THIS DOES NOT CONSTITUTE A GUARANTEE THAT NO SUCH EASEMENTS EXIST.

RECORD UTILITY INFORMATION HAS BEEN OBTAINED FOR LOCUS. VISIBLE SURFACE STRUCTURES HAVE BEEN LOCATED AND ARE SHOWN HEREON AND SUBSURFACE UTILITY LINES ARE SHOWN.

THE CERTIFICATIONS SHOWN HEREON ARE NOT INTENDED AS CERTIFICATION TO TITLE OR OWNERSHIP OF PROPERTY SHOWN. OWNERS OF ADJOINING PROPERTIES ARE ACCORDING TO CURRENT TOWN OF SALISBURY ASSESSORS RECORDS.

I CERTIFY:
THAT THIS ACTUAL SURVEY WAS MADE ON THE GROUND BETWEEN JUNE 19 AND JULY 13, 2020, AND THAT THE STRUCTURES AND PHYSICAL FEATURES ARE LOCATED AS SHOWN TO THE BEST OF MY ABILITY AND BELIEF.

COMMONWEALTH OF MASSACHUSETTS
JEFFREY S. HOFMANN
No. 36381
PROFESSIONAL LAND SURVEYOR

PROFESSIONAL LAND SURVEYOR — DATE 2/22/22

GRAPHIC SCALE
20 0 10 20 40 80
(IN FEET)
1 inch = 20'

PREPARED FOR

TOM PATENAUDE
P.O. BOX 5
NORTH ANDOVER, MA 01845

NO.	DATE	DESCRIPTION	BY
7	2/22/22	UPDATE WETLAND FLAGS	C.M.Y.
6	2/17/22	ADDRESS REVIEWER'S COMMENTS	C.M.Y.
5	1/31/22	ADDRESS REVIEWER'S COMMENTS	C.M.Y.
4	1/3/22	ADDRESS REVIEWER'S COMMENTS	C.M.Y.
3	8/5/21	ADDRESS REVIEWER'S COMMENTS	C.M.Y.
2	7/22/21	ADDRESS REVIEWER'S COMMENTS	C.M.Y.
1	6/23/21	ADDRESS PLANNING COMMENTS	C.M.Y.

MEI
MILLENNIUM ENGINEERING, INC.
ENGINEERING AND LAND SURVEYING
62 ELM ST. SALISBURY, MA 01952 (978) 463-8980
13 HAMPTON RD. EXETER, NH 03833 (603) 778-0528

SCALE: 1"=20'
DATE: JUN. 3, 2021
CALC. BY: S.F.R.
CHKD. BY: J.S.H.
PROJECT: M203759

SITE PLAN
IN
SALISBURY, MA
SHOWING
EXISTING CONDITIONS
AT A MAJORITY OF
207 BEACH ROAD
(MAP 28 – LOT 10)

EXISTING CONDITIONS

SHEET: C-2

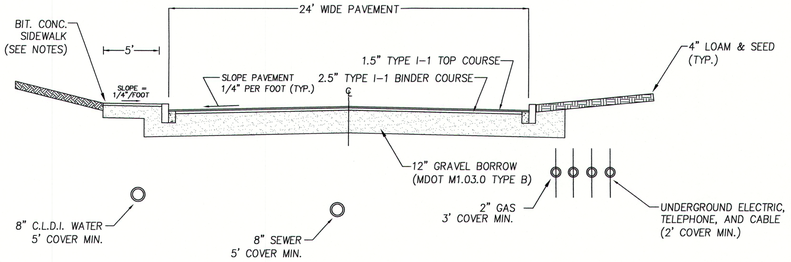

ROADWAY CROSS-SECTION
STA. 0+00 TO STA. 3+19±

N.T.S.

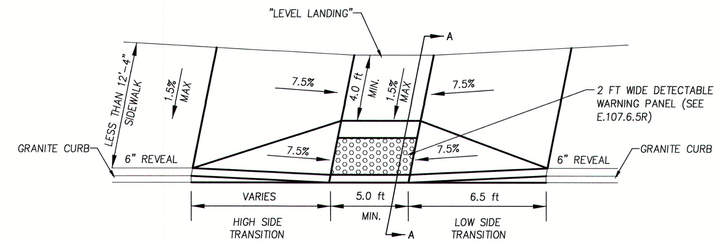

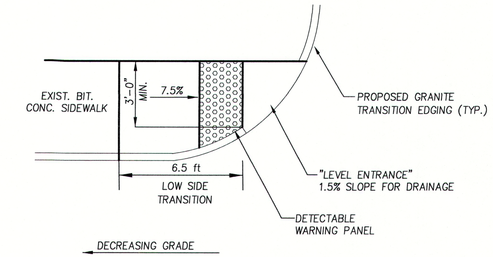

NOTES:

1. RAMP CROSS SECTION TO BE SAME AS SIDEWALK; I.E. DEPTH OF SURFACE AND FOUNDATION.
2. PORTLAND CEMENT CONCRETE RAMPS ARE TO BE TEXTURED BY BROOMING IN A DIRECTION PARALLEL TO THE LENGTH OF THE RAMP.
3. BASE OF RAMP SHALL MEET PAVEMENT GUTTER SUCH THAT THERE IS NO DIFFERENCE IN ELEVATION. RAMP SHALL BE CONSTRUCTED SUCH THAT WATER DOES NOT "PUDDLE" AT THE BASE OF THE RAMP.
4. THE PAVEMENT AT THE BASE OF THE RAMP SHALL BE PART OF THE CONTINUOUS TOP COURSE. THE USE OF A "PAVEMENT PATCH" TO COMPLY WITH THE CONDITIONS IN NOTE 3, ABOVE IS PROHIBITED.
5. RAMPS SHALL CONFORM TO MASS DOT WHEELCHAIR RAMP STANDARDS – LATEST REVISION.

ROADWAY PROFILE GRADE		HIGH SIDE TRANSITION LENGTH
%	G	ENGLISH UNITS
0	0.00	6'–6"
1	0.01	7'–8"
2	0.02	9'–0"
3	0.03	11'–0"
4	0.04	14'–0"
>4	>0.04	15'–0" MAX

A.D.A. ACCESS RAMP DETAIL

N.T.S.

LEGEND

EXISTING	PROPOSED	
	CB	CATCH BASIN (OR GUTTER INLET, OR LEACHING BASIN)
	CBCI (OR GICI)	CATCH BASIN (OR GUTTER INLET) WITH CURB INLET
		CURB (OR BERM) – TYPE NOTED
		EDGE OF ROAD
109	108	CONTOUR
		SEWER MANHOLE
		DRAINAGE MANHOLE
		GAS GATE
		WATER GATE
		SEPTIC TANK
		HYDRANT
FA	FA	FIRE ALARM BOX
		POST MOUNTED PEDESTRIAN LIGHT
		UTILITY POLE
D	D	DRAIN PIPE
S	S	SEWER MAIN
S		SEWER FORCE MAIN
UE	UE	UNDERGROUND ELECTRIC
W	W	WATER MAIN
MB	MB	MAIL BOX
		HIGHWAY GUARD (TYPE NOTED)
x x	x x	FENCE (SIZE AND TYPE NOTED)
		EASEMENT LINE
		PROPERTY LINE
		100 FT BUFFER ZONE
8 N00°00'00"E +12.34		BASE OR SURVEY LINE
	PC 8 N00°00'00"E +12.34	CONSTRUCTION BASELINE
		WHEELCHAIR RAMP (WCR)
		CONCRETE SIDEWALK
		HAND CORE
	SF	SILT SOCK
		WETLAND

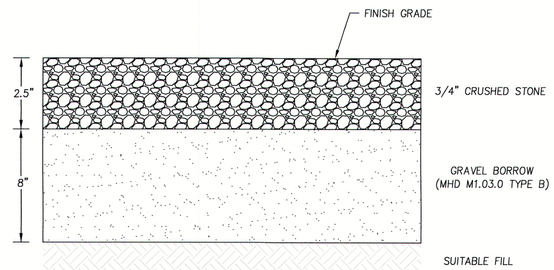

CRUSHED STONE DRIVEWAY DETAIL

N.T.S.

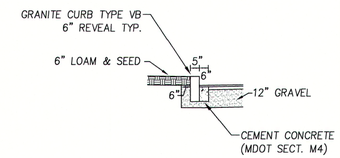

TYPICAL GRANITE CURBING DETAIL

N.T.S.

SIDEWALK NOTES

SIDEWALKS SHALL BE FIVE FEET IN WIDTH FOR THEIR ENTIRE LENGTH, WITH A 1% CROSS SLOPE (1.5% MAX).

SIDEWALKS SHALL BE CONSTRUCTED WITH A 1.5" TYPE I-1 BITUMINOUS CONCRETE FINISH COURSE, A 1.5" TYPE I-1 BITUMINOUS CONCRETE BINDER COURSE OVER AN 8" GRAVEL BASE (MDOT M1.03.0 TYPE B).

WHERE SIDEWALKS TRAVERSE A DRIVEWAY, THE GRAVEL BASE SHALL BE 12" THICK.

GENERAL NOTES

1. THE CONTRACTOR SHALL REPORT TO THE OWNER AND ENGINEER ANY SIGNIFICANT VARIATIONS IN EXISTING SITE CONDITIONS. ANY PROPOSED REVISIONS TO THE WORK SHALL NOT BE UNDERTAKEN UNTIL REVIEWED AND APPROVED BY THE OWNER AND REGULATING CITY AND/OR STATE AGENCIES.
2. THE CONTRACTOR SHALL INSTALL ALL SYSTEM COMPONENTS IN ACCORDANCE WITH THE MANUFACTURER'S SPECIFICATIONS AND ALL APPLICABLE ELECTRICAL, PLUMBING, AND SANITARY CODES.
3. ALL WORK SHALL CONFORM TO; THE SALISBURY PLANNING BOARD RULES AND REGULATIONS GOVERNING THE SUBDIVISION OF LAND, THE WETLANDS PROTECTION ACT (310 CMR 10.00), THE ORDER OF CONDITIONS ISSUED BY THE SALISBURY CONSERVATION COMMISSION, TOWN OF SALISBURY ZONING CODE, CHAPTER 300. ZONING; ARTICLE III. USE REGULATIONS; ARTICLE IV. DIMENSIONAL REGULATIONS; TABLE C–4. OFF STREET PARKING STANDARDS; ARTICLE XVIII. SITE PLAN REVIEW; CHAPTER 465. PLANNING BOARD, §465 10–13; AND PLANNING BOARD RULES AND REGULATIONS, III. SITE PLAN REVIEW.
4. THE LOCATION OF ALL UTILITIES, AS SHOWN ON THESE PLANS, ARE BASED UPON PLANS AND RECORD INFORMATION PROVIDED BY MUNICIPAL AND PRIVATE UTILITY COMPANIES AND ARE CONSIDERED APPROXIMATE BOTH AS TO SIZE AND LOCATION. NO WARRANTY IS MADE AS TO THE ACCURACY OF THESE LOCATIONS OR THAT ALL UTILITIES ARE SHOWN. THE CONTRACTOR SHALL NOT RELY ON THESE PLANS FOR SUCH INFORMATION AND WILL MAKE EXAMINATIONS IN THE FIELD BY VARIOUS AVAILABLE RECORDS, UTILITY COMPANIES AND INDIVIDUALS, AS TO THE LOCATION OF ALL SUBSURFACE STRUCTURES.
5. THE CONTRACTOR SHALL VERIFY THE LOCATION OF EXISTING UTILITIES BY CONTACTING "DIG–SAFE" AT LEAST 72 HOURS PRIOR TO ANY EXCAVATION. DIG–SAFE TELEPHONE NUMBER: 1–888–344–7233.
6. THE CONTRACTOR SHALL FIELD CHECK ALL DIMENSIONS AND ELEVATIONS BEFORE PROCEEDING WITH THE NEW WORK. HE/SHE SHALL EXCAVATE TO VERIFY PERTINENT DRAINAGE INVERTS AND POTENTIAL UTILITY CONFLICTS. ANY DISCREPANCIES SHALL BE REPORTED TO THE OWNER IMMEDIATELY.
7. ALL EXISTING STRUCTURES AND SURFACES, UNLESS OTHERWISE SHOWN, SHALL BE COMPLETELY REMOVED FROM THE AREAS OF WORK. ALL TREES SCHEDULED FOR REMOVAL SHALL BE FIELD MARKED AND APPROVED FOR REMOVAL BY THE OWNER PRIOR TO CUTTING OPERATIONS.
8. THE CONTRACTOR IS RESPONSIBLE FOR INITIATING, MAINTAINING AND SUPERVISING ALL SAFETY PRECAUTIONS AND PROGRAMS IN CONNECTION WITH THE WORK. THE CONTRACTOR SHALL TAKE ALL NECESSARY PRECAUTIONS FOR THE SAFETY OF THE PUBLIC, EMPLOYEES, AND ALL OTHER PERSONS ASSOCIATED WITH THE PROJECT. HE/SHE SHALL COORDINATE AND BE RESPONSIBLE FOR ALL SAFETY SIGNING, BARRIERS AND TEMPORARY PAVEMENT MARKINGS NECESSARY TO PROVIDE A SMOOTH AND PROPER TRANSITION FOR TRAFFIC FLOW.
9. IF REQUIRED BY THE CONTRACTOR, OVERHEAD LINES SHALL BE RELOCATED BY THE UTILITY COMPANY AT THE CONTRACTORS EXPENSE.
10. ALL SEWER MAINS AND SERVICES SHALL BE INSTALLED AT LEAST 10 FEET HORIZONTALLY OR 18 INCHES VERTICALLY FROM PROPOSED WATER MAINS AND SERVICES AND SHALL MAINTAIN 5 FEET OF COVER OVER THE TOP OF THE PIPING, UNLESS OTHERWISE SHOWN OR APPROVED. PIPES SHALL BE ENCASED IN CONCRETE WHERE THIS SEPARATION CANNOT BE OBTAINED.
11. ALL WATER MAINS SHALL BE INSTALLED WITH A MINIMUM OF 5 FEET OF COVER OVER THE TOP OF THE PIPE, UNLESS OTHERWISE SHOWN OR APPROVED.
12. WHENEVER SEWER MAINS MUST CROSS WATER MAINS, THE SEWER SHALL BE CONSTRUCTED AS FOLLOWS; A) JOINTS SHALL BE MECHANICAL TYPE WATER PRESSURE RATED WITH ZERO LEAKAGE WHEN TESTED AT 25 PSI FOR GRAVITY SEWERS AND 1.5 TIMES WORKING PRESSURE FOR FORCE MAINS AND JOINTS NOT TO BE LOCATED WITHIN 9 FEET OF THE CROSSING; B) SEWER SERVICES SHOULD BE INSTALLED A MINIMUM OF 18 INCHES BELOW WATER MAINS. IF SEPARATION IS LESS THAN 18 INCHES, SEWER SERVICE SHALL BE CONCRETE ENCASED OR CONSTRUCTED WITH PRESSURE CLASS PVC FOR A DISTANCE OF 10 FEET EACH SIDE OF THE WATER MAIN. 10–FOOT MINIMUM HORIZONTAL SEPARATION DISTANCE SHALL BE MAINTAINED.
13. INDIVIDUAL BUILDING OWNERS ARE RESPONSIBLE FOR MAINTENANCE OF THEIR SEWER SERVICE FROM THE BUILDING TO THE CONNECTION TO THE SEWER MAIN.
14. ALL SIGNS AND PAVEMENT MARKINGS TO BE INSTALLED WITHIN THE PROJECT SITE SHALL CONFORM TO THE APPLICABLE SPECIFICATIONS OF THE MANUAL ON UNIFORM TRAFFIC CONTROL DEVICES (MUTCD).
15. 14 DAYS PRIOR TO COMMENCING CONSTRUCTION, THE OWNER/DEVELOPER SHALL PRESENT A CONSTRUCTION SCHEDULE TO THE PLANNING DEPARTMENT.
16. THE OWNER/DEVELOPER SHALL SUBMIT TWO HARD COPIES OF AS–BUILT DRAWINGS TO THE PLANNING BOARD PRIOR TO FINAL OCCUPANCY. AS BUILTS SHALL INCLUDE ALL LANDBASE AND UTILITIES INFORMATION.
17. ONSITE BURIAL OF STUMPS OR ANY OTHER DEBRIS IS PROHIBITED.
18. THE PROPERTY LIES WITHIN THE 100–YEAR FLOOD PLAIN (ZONE AE, ELEV. 9) ACCORDING TO F.I.R.M. COMMUNITY PANEL NUMBER 25009C 0129F.
19. ALL ELEVATIONS ARE BASED ON N.A.V.D. 1988.

MATERIAL NOTES

ALL MATERIALS OF THE ELEMENTS IN THE SITE PLAN MUST CONFORM TO THE FOLLOWING STANDARDS:

1. COMMONWEALTH OF MASSACHUSETTS DEPARTMENT OF TRANSPORTATION STANDARD SPECIFICATIONS FOR HIGHWAYS AND BRIDGES (LATEST EDITION)
2. 521 CMR RULES AND REGULATIONS OF THE ARCHITECTURAL ACCESS BOARD (AAB) AND THE AMERICANS WITH DISABILITIES ACT (ADA)
3. SPECIFICATIONS BY THE TOWN OF SALISBURY AS SET FORTH BY SECTION 7 DESIGN STANDARDS IN THE PLANNING BOARD RULES AND REGULATIONS GOVERNING THE SUBDIVISION OF LAND, DATED NOVEMBER 1, 2013
4. UTILITIES INSTALLED PER PENNICHUCK WATER SERVICE CORPORATION SPECIFICATIONS

ROADWAY NOTES

1.) ALL STUMPS, ROCKS, PEAT AND LEDGE WITHIN THE LIMITS OF THE PROPOSED PAVED WAY SHALL BE REMOVED. ALL LEDGE SHALL BE REMOVED TO A MINIMUM DEPTH OF 2' BELOW FINISHED PAVEMENT GRADE.

2.) ROADWAY SHALL NOT BE CONSTRUCTED DURING FREEZING WEATHER OR ON WET OR FROZEN SUBGRADE.

3.) GRADING AND ROLLING SHALL BE REQUIRED TO PROVIDE A SMOOTH, EVEN, AND UNIFORM COMPACTED BASE WHICH IS COMPACTED TO A MINIMUM DRY DENSITY OF 95 PERCENT.

4.) THE MINIMUM SLOPE FROM THE CROWN OF FINISHED BASE COURSE SHALL BE 1/4" PER FOOT UNLESS OTHERWISE SHOWN.

5.) ALL UNSUITABLE MATERIAL SHALL BE EXCAVATED AND REPLACED WITH SATISFACTORY MATERIAL AND BROUGHT UP TO GRADE WITH GRAVEL BORROW CONTAINING NO STONES GREATER THAN 6" DIAMETER.

6.) AT ALL TIMES DURING CONSTRUCTION, THE SUB–GRADE AND ALL DITCHES SHALL BE CONSTRUCTED AND MAINTAINED SO THAT THE ROADWAY WILL EFFECTIVELY BE DRAINED.

7.) THE CONTRACTOR SHALL REFER TO THE SALISBURY PLANNING BOARD RULES AND REGULATIONS GOVERNING THE SUBDIVISION OF LAND, SECTIONS I – VII.

SURVEY

120	WETLAND DELINEATION FLAG
C.B.	CONCRETE BOUND
S.B.	STONE BOUND
D.H.	DRILL HOLE
PK	MASONRY NAIL
I.P.	IRON PIPE
I ROD	IRON ROD
FND.	FOUND
N/FND.	NOT FOUND
0/00	ASSESSORS MAP AND PARCEL

COMMONWEALTH OF MASSACHUSETTS CHRISTOPHER W. YORK CIVIL No. 49181 REGISTERED PROFESSIONAL ENGINEER
3-17-22

PREPARED FOR

TOM PATENAUDE
P.O. BOX 5
NORTH ANDOVER, MA 01845

NO.	DATE	DESCRIPTION	BY
8	3/17/22	ADDRESS REVIEWER'S COMMENTS	C.M.Y.
7	3/3/22	ADDRESS REVIEWER'S COMMENTS	C.M.Y.
6	2/17/22	ADDRESS REVIEWER'S COMMENTS	C.M.Y.
5	1/31/22	ADDRESS REVIEWER'S COMMENTS	C.M.Y.
4	1/3/22	ADDRESS REVIEWER'S COMMENTS	C.M.Y.
3	8/5/21	ADDRESS REVIEWER'S COMMENTS	C.M.Y.
2	7/22/21	ADDRESS REVIEWER'S COMMENTS	C.M.Y.

MEI
MILLENNIUM ENGINEERING, INC.
ENGINEERING AND LAND SURVEYING
62 ELM ST. SALISBURY, MA 01952 (978) 463–8980
13 HAMPTON RD. EXETER, NH 03833 (603) 778–0528

SCALE: 1"=20' | DESG. BY: C.M.Y.
DATE: JUN. 3, 2021 | CHKD. BY: E.W.B.
PROJECT: M203759

SITE PLAN
IN
SALISBURY, MA

SHOWING
PROPOSED SITE DEVELOPMENT
AT
207 BEACH ROAD (LOTS 249–258)

TYPICAL SECTIONS/ LEGEND/ GENERAL NOTES

SHEET: C–3

E:\cadproj-2020\M203759\dwg\M203759-D.dwg 3/18/2022 11:17:07 AM EDT

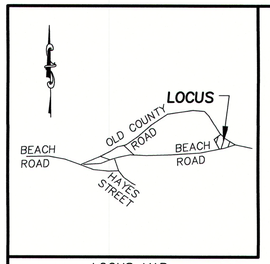

LOCUS MAP
N.T.S.

RESOURCE AREA IMPACTS
TOTAL BUFFER ZONE IMPACT = 32,300 S.F.
TOTAL LSCSF IMPACT = 44,400 S.F.

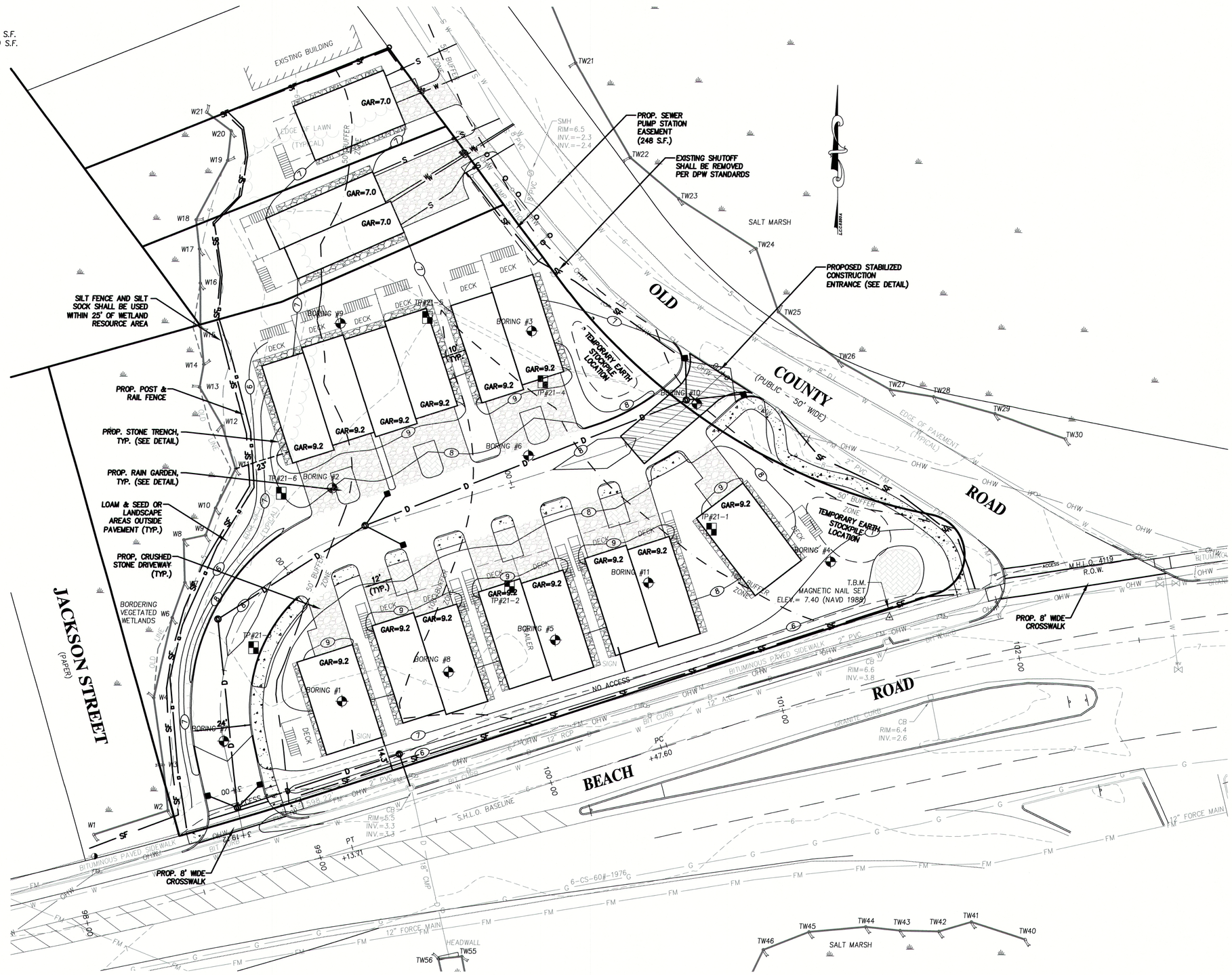

LEGEND

- EXIST. CONTOUR
- PROP. CONTOUR
- PROP. TREELINE
- PROP. POST & RAIL FENCE
- PROP. EROSION CONTROL
- PROP. BIT. CONC. SIDEWALK
- PROP. GUTTER INLET
- PROP. SPOT GRADE
- PROP. DRAIN MANHOLE
- EXIST. CATCH BASIN
- EXIST. UTILITY POLE
- WETLANDS
- EXIST. TEST PIT

GRAPHIC SCALE
20 0 10 20 40 80
(IN FEET)
1 inch = 20'

COMMONWEALTH OF MASSACHUSETTS
CHRISTOPHER M. YORK
CIVIL
No. 49181
REGISTERED PROFESSIONAL ENGINEER
3-17-22

PREPARED FOR

TOM PATENAUDE
P.O. BOX 5
NORTH ANDOVER, MA 01845

NO.	DATE	DESCRIPTION	BY
8	3/17/22	ADDRESS REVIEWER'S COMMENTS	C.M.Y.
7	3/3/22	ADDRESS REVIEWER'S COMMENTS	C.M.Y.
6	2/17/22	ADDRESS REVIEWER'S COMMENTS	C.M.Y.
5	1/31/22	ADDRESS REVIEWER'S COMMENTS	C.M.Y.
4	1/3/22	ADDRESS REVIEWER'S COMMENTS	C.M.Y.
3	8/5/21	ADDRESS REVIEWER'S COMMENTS	C.M.Y.
2	7/22/21	ADDRESS REVIEWER'S COMMENTS	C.M.Y.

MILLENNIUM ENGINEERING, INC.
ENGINEERING AND LAND SURVEYING
62 ELM ST. SALISBURY, MA 01952 (978) 463-8980
13 HAMPTON RD. EXETER, NH 03833 (603) 778-0528

SCALE: 1"=20' | DESG. BY: C.M.Y.
DATE: JUN. 3, 2021 | CHKD. BY: E.W.B.
PROJECT: M203759

SITE PLAN
IN
SALISBURY, MA
SHOWING
PROPOSED SITE DEVELOPMENT
AT
207 BEACH ROAD (LOTS 249-258)

GRADING PLAN

SHEET: C-4

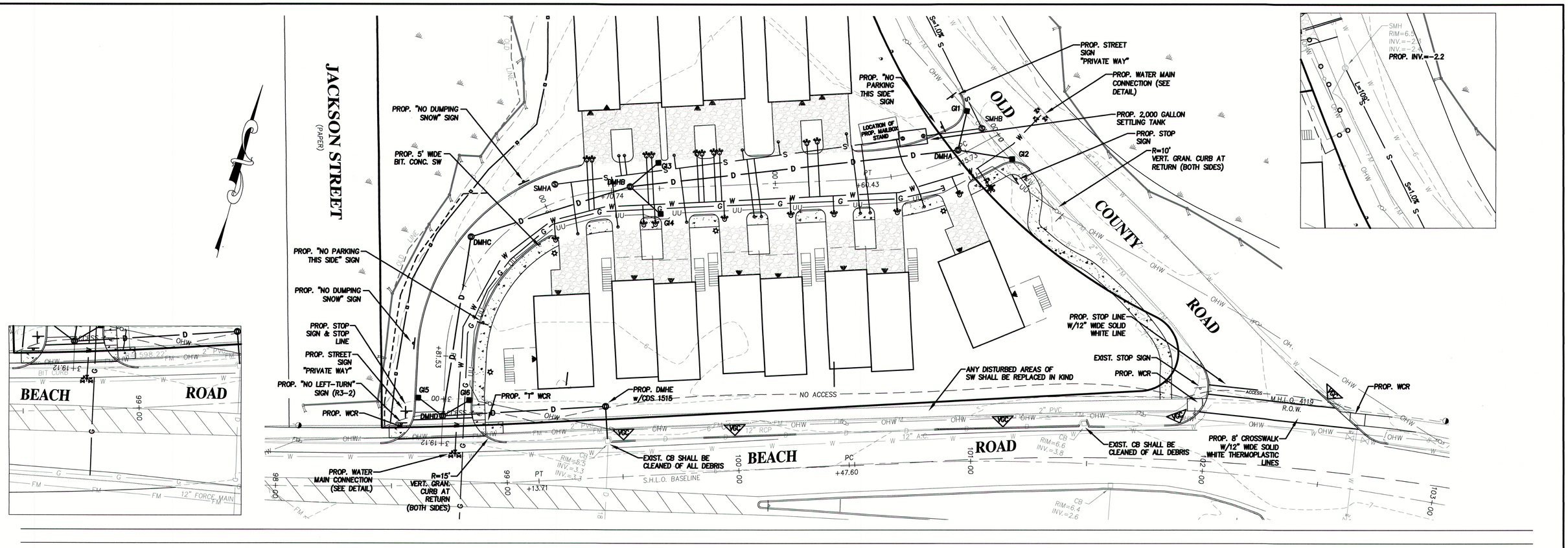

LEGEND

- W — EXISTING WATER MAIN
- S — EXISTING SEWER MAIN
- W — PROPOSED WATER SERVICE
- S — PROPOSED SEWER MAIN
- SS — PROPOSED SEWER SERVICE
- G — PROPOSED GAS MAIN
- UU — PROPOSED UNDERGROUND UTILITIES
- PROPOSED WATER GATE
- PROPOSED WATER SHUTOFF
- PROPOSED SEWER MANHOLE
- PROPOSED FIRE HYDRANT
- PROPOSED STREET LIGHT
- PROPOSED SEWER SERVICE
- PROP. BIT. CONC. CURB
- PROP. VERT. GRAN. CURB

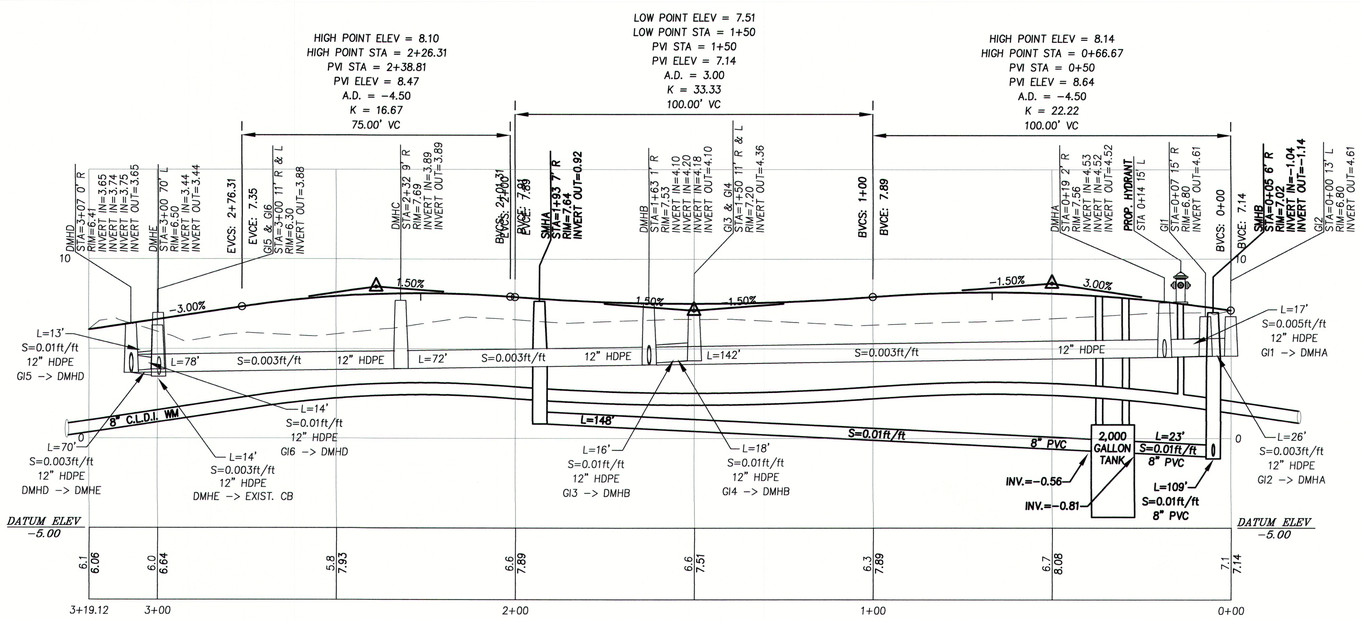

GRAPHIC SCALE

20 0 10 20 40 80

(IN FEET)
Horiz: 1 inch = 20'
Vert: 1 inch = 4'

COMMONWEALTH OF MASSACHUSETTS
CHRISTOPHER M. YORK
CIVIL
No. 49181
REGISTERED PROFESSIONAL ENGINEER
3-17-22

PREPARED FOR

TOM PATENAUDE
P.O. BOX 5
NORTH ANDOVER, MA 01845

NO.	DATE	DESCRIPTION	BY
8	3/17/22	ADDRESS REVIEWER'S COMMENTS	C.M.Y.
7	3/3/22	ADDRESS REVIEWER'S COMMENTS	C.M.Y.
6	2/17/22	ADDRESS REVIEWER'S COMMENTS	C.M.Y.
5	1/31/22	ADDRESS REVIEWER'S COMMENTS	C.M.Y.
4	1/3/22	ADDRESS REVIEWER'S COMMENTS	C.M.Y.
3	8/5/21	ADDRESS REVIEWER'S COMMENTS	C.M.Y.
2	7/22/21	ADDRESS REVIEWER'S COMMENTS	C.M.Y.

MILLENNIUM ENGINEERING, INC.
ENGINEERING AND LAND SURVEYING
62 ELM ST. SALISBURY, MA 01952 (978) 463-8980
13 HAMPTON RD. EXETER, NH 03833 (603) 778-0528

SCALE: 1"=20' | DESG. BY: C.M.Y. | PROJECT: M203759
DATE: JUN. 3, 2021 | CHKD. BY: E.W.B.

SITE PLAN
IN
SALISBURY, MA
SHOWING
PROPOSED SITE DEVELOPMENT
AT
207 BEACH ROAD (LOTS 249-258)

UTILITY PLAN & PROFILE

SHEET: C-5

K:\data\proj\2020\M203759\dwg\M203759-D.dwg 3/16/2022 11:17:07 AM EDT

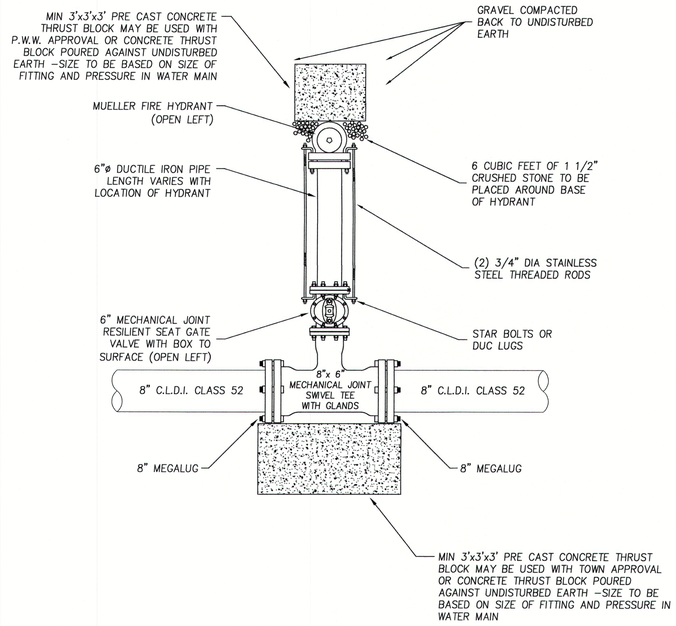

TYPICAL FIRE HYDRANT INSTALLATION

N.T.S.

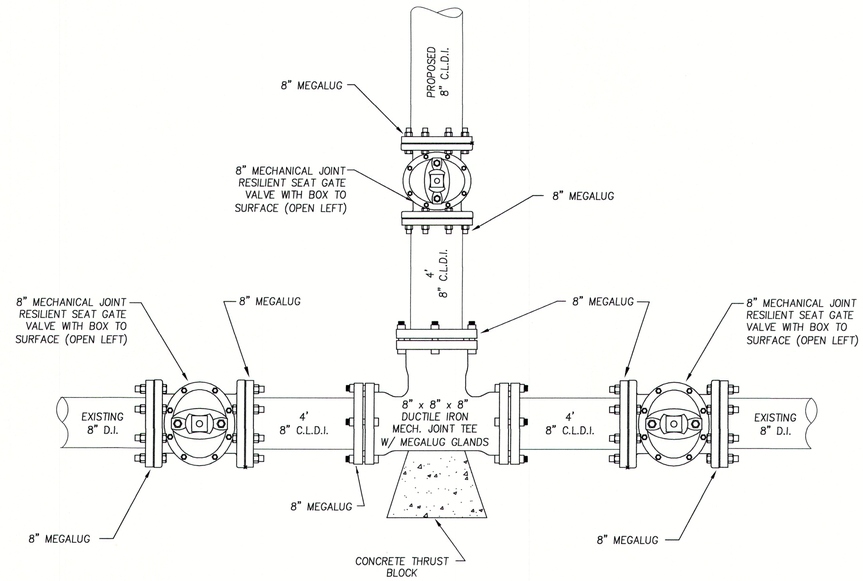

WATER MAIN CONNECTION DETAIL @ OLD COUNTY ROAD

N.T.S.

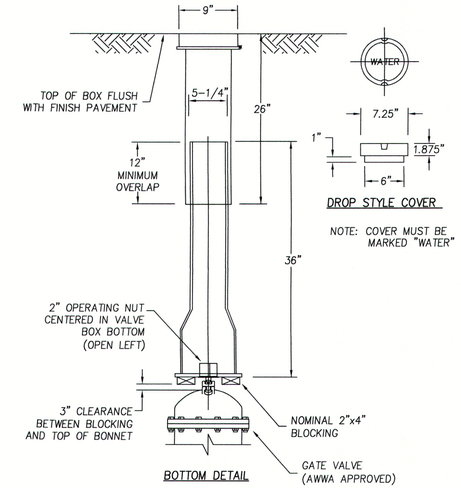

TYPICAL GATE VALVE BOX DETAIL

N.T.S.

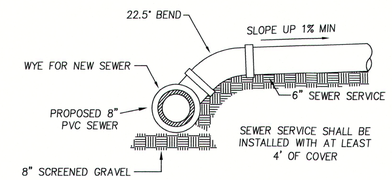

SEWER SERVICE DETAIL

N.T.S.

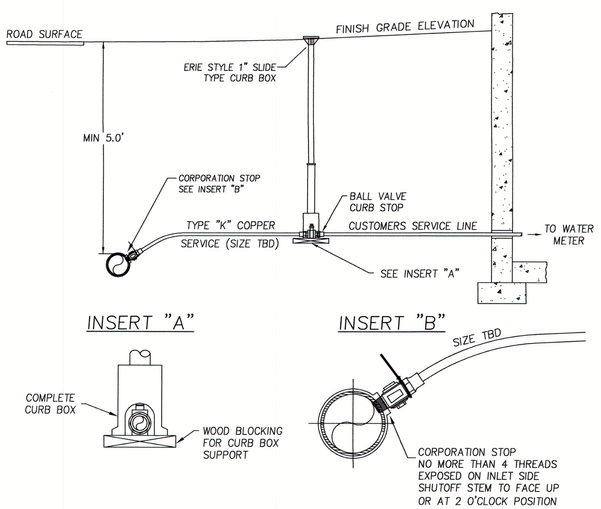

TYPICAL COPPER SERVICE CONNECTION

N.T.S.

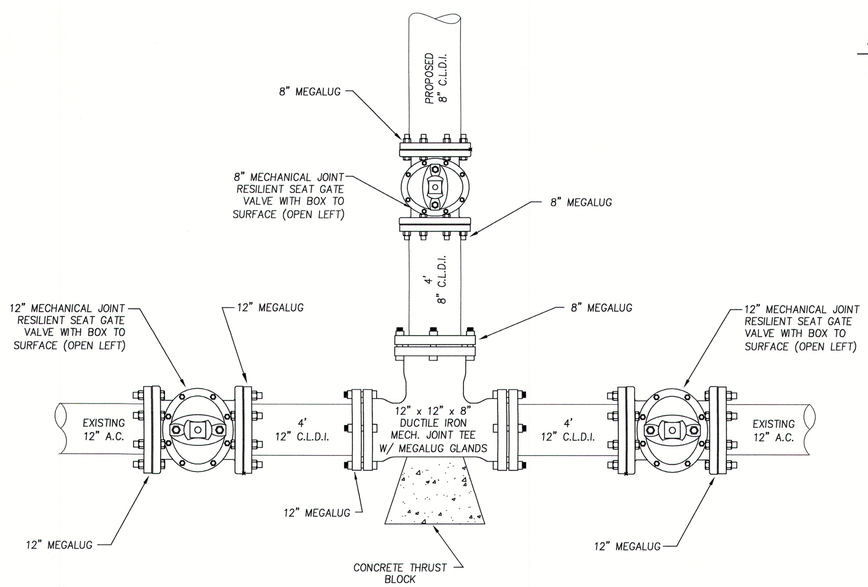

WATER MAIN CONNECTION DETAIL @ BEACH ROAD

N.T.S.

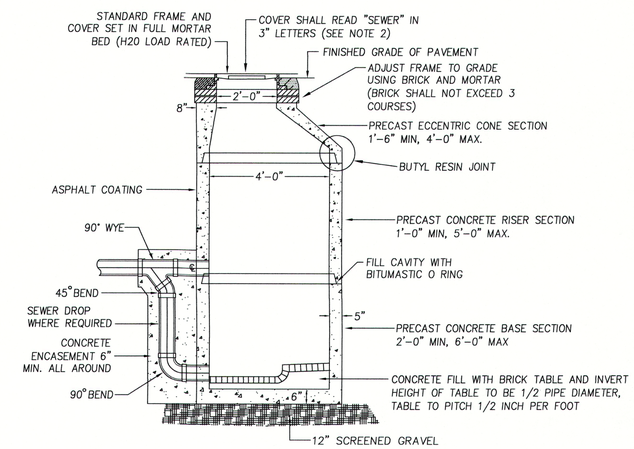

NOTES: 1) SEWER MANHOLES SHALL CONFORM TO ASTM C478 AND ASTM C185
2) COVER SHALL BE LEBARON FOUNDRY (MODEL NO. LA246), MECHANICS IRON FOUNDRY, NEEHAN FOUNDRY, OR EQUAL.

PRECAST SEWER MANHOLE DETAIL

N.T.S.

COMMONWEALTH OF MASSACHUSETTS — CHRISTOPHER M. YORK — CIVIL — No. 49181 — REGISTERED PROFESSIONAL ENGINEER

Chris M. York 3-17-22

PREPARED FOR

TOM PATENAUDE
P.O. BOX 5
NORTH ANDOVER, MA 01845

NO.	DATE	DESCRIPTION	BY
8	3/17/22	ADDRESS REVIEWER'S COMMENTS	C.M.Y.
7	3/3/22	ADDRESS REVIEWER'S COMMENTS	C.M.Y.
6	2/17/22	ADDRESS REVIEWER'S COMMENTS	C.M.Y.
5	1/31/22	ADDRESS REVIEWER'S COMMENTS	C.M.Y.
4	1/3/22	ADDRESS REVIEWER'S COMMENTS	C.M.Y.
3	8/5/21	ADDRESS REVIEWER'S COMMENTS	C.M.Y.
2	7/22/21	ADDRESS REVIEWER'S COMMENTS	C.M.Y.

MEI
MILLENNIUM ENGINEERING, INC.
ENGINEERING AND LAND SURVEYING
62 ELM ST. SALISBURY, MA 01952 (978) 463-8980
13 HAMPTON RD. EXETER, NH 03833 (603) 778-0528

SCALE: 1"=20' | DESG. BY: C.M.Y.
DATE: JUN. 3, 2021 | CHKD. BY: E.W.B. | PROJECT: M203759

SITE PLAN
IN
SALISBURY, MA
SHOWING
PROPOSED SITE DEVELOPMENT
AT
207 BEACH ROAD (LOTS 249–258)

UTILITY DETAILS

SHEET: C-6

E:\cadd\proj-2020\M203759\dwg\M203759-D.dwg 3/16/2022 11:17:07 AM EDT

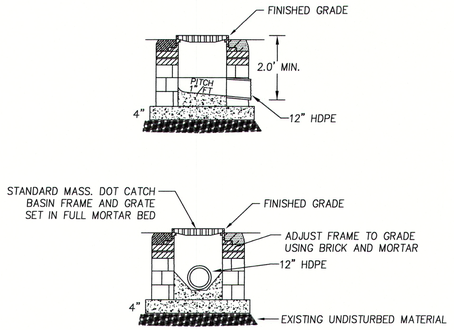

CONCRETE BLOCK GUTTER INLET

N.T.S.

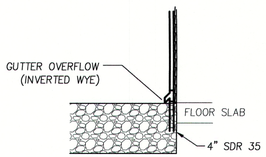

GUTTER DOWN SPOUT DETAIL

N.T.S.

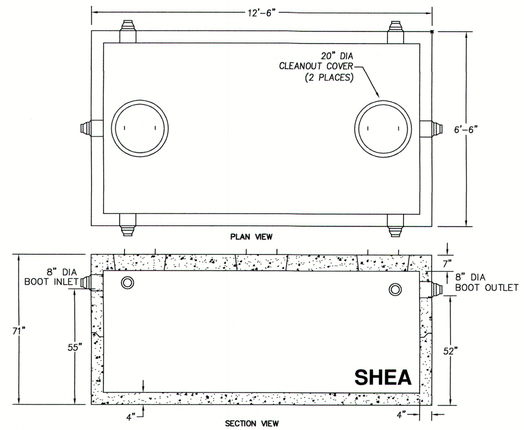

NOTES:
1. CONCRETE: 4,000 PSI MINIMUM AFTER 28 DAYS.
2. DESIGN CONFORMS WITH 310 CMR 15.00, DEP TITLE 5 REGS, FOR SEPTIC TANKS
3. ALL REINFORCEMENT PER ASTM C1227.
4. DESIGNED FOR AASHTO HS-20 LOADING, 1 TO 5 FT COVER.
5. TONGUE & GROOVE JOINT SEALED WITH BUTYL RESIN

2,000 GALLON HEAVY DUTY SEPTIC TANK

N.T.S.

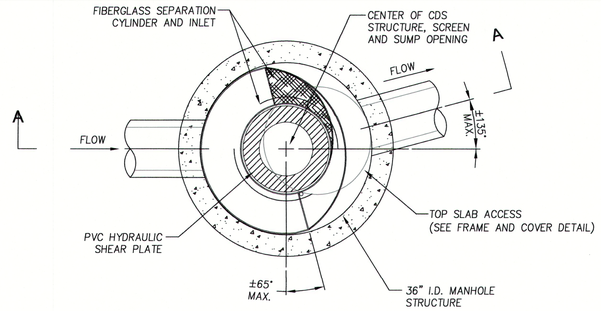

PLAN VIEW B-B

N.T.S.

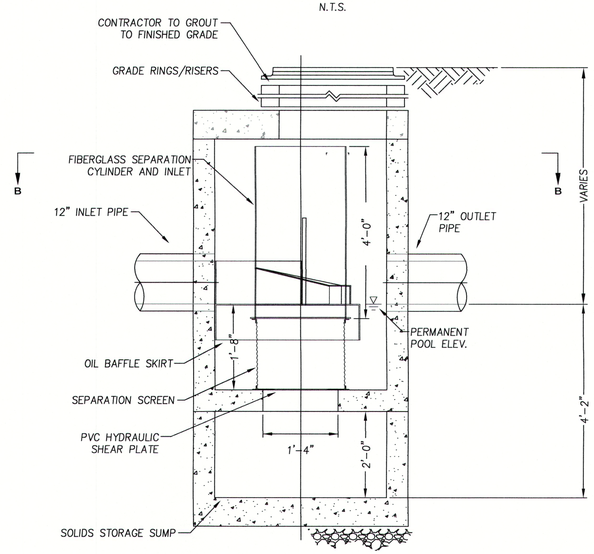

ELEVATION A-A

N.T.S.

CDS1515-3-C DETAIL

N.T.S.

FRAME AND COVER

(DIAMETER VARIES)
N.T.S.

GENERAL NOTES
1. CONTECH TO PROVIDE ALL MATERIALS UNLESS NOTED OTHERWISE.
2. DIMENSIONS MARKED WITH ( ) ARE REFERENCE DIMENSIONS. ACTUAL DIMENSIONS MAY VARY.
3. FOR FABRICATION DRAWINGS WITH DETAILED STRUCTURE DIMENSIONS AND WEIGHTS, PLEASE CONTACT YOUR CONTECH CONSTRUCTION PRODUCTS REPRESENTATIVE. www.contech-cpi.com
4. CDS WATER QUALITY STRUCTURE SHALL BE IN ACCORDANCE WITH ALL DESIGN DATA AND INFORMATION CONTAINED IN THIS DRAWING.
5. STRUCTURE SHALL MEET AASHTO HS20 AND CASTINGS SHALL MEET AASHTO M306 LOAD RATING, ASSUMING GROUNDWATER ELEVATION AT, OR BELOW, THE OUTLET PIPE INVERT ELEVATION. ENGINEER OF RECORD TO CONFIRM ACTUAL GROUNDWATER ELEVATION.
6. PVC HYDRAULIC SHEAR PLATE IS PLACED ON SHELF AT BOTTOM OF SCREEN CYLINDER. REMOVE AND REPLACE AS NECESSARY DURING MAINTENANCE CLEANING.

INSTALLATION NOTES
1. ANY SUB-BASE, BACKFILL DEPTH, AND/OR ANTI-FLOTATION PROVISIONS ARE SITE-SPECIFIC DESIGN CONSIDERATIONS AND SHALL BE SPECIFIED BY ENGINEER OF RECORD.
2. CONTRACTOR TO PROVIDE EQUIPMENT WITH SUFFICIENT LIFTING AND REACH CAPACITY TO LIFT AND SET THE CDS MANHOLE STRUCTURE (LIFTING CLUTCHES PROVIDED).
3. CONTRACTOR TO ADD JOINT SEALANT BETWEEN ALL STRUCTURE SECTIONS, AND ASSEMBLE STRUCTURE.
4. CONTRACTOR TO PROVIDE, INSTALL, AND GROUT PIPES. MATCH PIPE INVERTS WITH ELEVATIONS SHOWN.
5. CONTRACTOR TO TAKE APPROPRIATE MEASURES TO ASSURE UNIT IS WATER TIGHT, HOLDING WATER TO FLOWLINE INVERT MINIMUM. IT IS SUGGESTED THAT ALL JOINTS BELOW PIPE INVERTS ARE GROUTED.

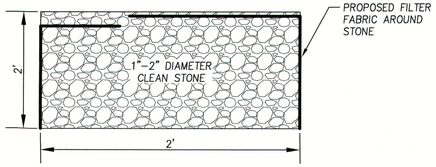

NOTE: PRIOR TO FILL MATERIAL INSTALLATION, ALL TOPSOIL, SUBSOIL, AND UNSUITABLE MATERIAL SHALL BE REMOVED AND REPLACED WITH COARSE SAND TO BOTTOM OF TRENCH.

STONE TRENCH DETAIL (SINGLE-FAMILY)

N.T.S.

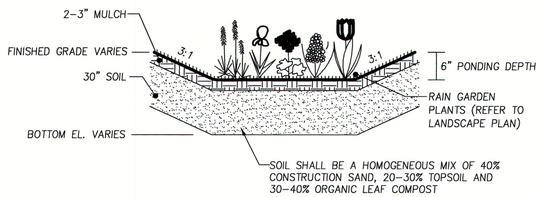

RAIN GARDEN DETAIL

N.T.S.

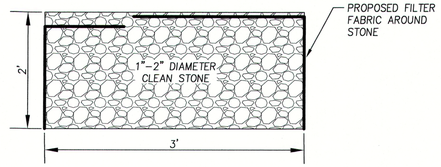

NOTE: PRIOR TO FILL MATERIAL INSTALLATION, ALL TOPSOIL, SUBSOIL, AND UNSUITABLE MATERIAL SHALL BE REMOVED AND REPLACED WITH COARSE SAND TO BOTTOM OF TRENCH.

STONE TRENCH DETAIL (DUPLEX)

N.T.S.

TEST PIT#21-1

ELEV. = 6.5

0"	SANDY FILL
52"	C1 – F/M SAND
79"	O – PEAT MOSS
108"	C2 – F/M SAND
125"+	

ESHWT = 48" = 2.5
PERFORMED ON 7/8/21 BY A. PARKER

TEST PIT#21-2

ELEV. = 6.5

0"	SANDY FILL
44"	C1 – M/C SAND
71"	O – PEAT MOSS
125"+	

ESHWT = 48" = 2.5
PERFORMED ON 7/8/21 BY A. PARKER

TEST PIT#21-3

ELEV. = 6.5

0"	SANDY FILL
60"	O – PEAT MOSS
125"+	

ESHWT = 49" = 2.4
PERFORMED ON 7/8/21 BY A. PARKER

TEST PIT#21-4

ELEV. = 7.0

0"	SANDY FILL
48"	Ab – M/C SAND
58"	E – SAND
66"	C1 – F/M SAND
120"+	

ESHWT = 38" = 3.8
PERFORMED ON 7/8/21 BY A. PARKER

TEST PIT#21-5

ELEV. = 7.0

0"	SANDY FILL
58"	O – PEAT MOSS
83"	C1 – F/M SAND
120"+	

ESHWT = 51" = 2.8
PERFORMED ON 7/8/21 BY A. PARKER

TEST PIT#21-6

ELEV. = 7.0

0"	SANDY FILL
52"	Ab – M/C SAND
58"	E – SAND
62"	C1 – F/M SAND
120"+	

ESHWT = 51" = 2.8
PERFORMED ON 7/8/21 BY A. PARKER

COMMONWEALTH OF MASSACHUSETTS
CHRISTOPHER M. YORK
CIVIL
No. 49181
REGISTERED PROFESSIONAL ENGINEER
3-17-22

PREPARED FOR

TOM PATENAUDE
P.O. BOX 5
NORTH ANDOVER, MA 01845

NO.	DATE	DESCRIPTION	BY
8	3/17/22	ADDRESS REVIEWER'S COMMENTS	C.M.Y.
7	3/3/22	ADDRESS REVIEWER'S COMMENTS	C.M.Y.
6	2/17/22	ADDRESS REVIEWER'S COMMENTS	C.M.Y.
5	1/31/22	ADDRESS REVIEWER'S COMMENTS	C.M.Y.
4	1/3/22	ADDRESS REVIEWER'S COMMENTS	C.M.Y.
3	8/5/21	ADDRESS REVIEWER'S COMMENTS	C.M.Y.
2	7/22/21	ADDRESS REVIEWER'S COMMENTS	C.M.Y.

MEI
MILLENNIUM ENGINEERING, INC.
ENGINEERING AND LAND SURVEYING
62 ELM ST. SALISBURY, MA 01952 (978) 463-8980
13 HAMPTON RD. EXETER, NH 03833 (603) 778-0528

SCALE: 1"=20' | DESG. BY: C.M.Y.
DATE: JUN. 3, 2021 | CHKD. BY: E.W.B.
PROJECT: M203759

SITE PLAN
IN
SALISBURY, MA
SHOWING
PROPOSED SITE DEVELOPMENT
AT
207 BEACH ROAD (LOTS 249-258)

DRAINAGE DETAILS

SHEET: C-7

E:\MEIdeproj-2020\M203759\dwg\M203759-D.dwg 5/16/2022 11:17:07 AM EDT

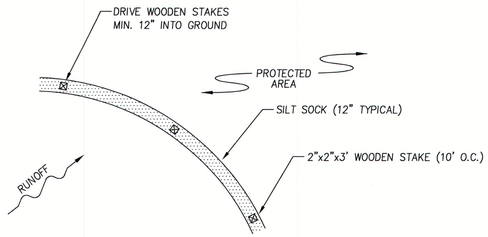

NOTES

1. ALL MATERIAL SHALL MEET SPECIFICATIONS BY FILTREXX OR APPROVED EQUAL.
2. SILT SOCK SHALL BE INSPECTED WITHIN 24 HOURS AFTER EACH RAINFALL AND AT LEAST DAILY DURING PROLONGED RAINFALL. ANY REPAIRS THAT ARE REQUIRED SHALL BE MADE IMMEDIATELY.
3. THE CONTRACTOR SHALL REMOVE SEDIMENT AT THE BASE OF THE UPSLOPE SIDE OF THE SILT SOCK WHEN ACCUMULATION HAS REACHED 1/2 OF THE EFFECTIVE HEIGHT OF THE SILT SOCK.
4. SILT SOCK SHALL BE MAINTAINED UNTIL DISTURBED AREA ABOVE THE DEVICE HAS BEEN PERMANENTLY STABILIZED AND CONSTRUCTION ACTIVITY HAS BEEN COMPLETED.
5. SEDIMENT DEPOSITS THAT ARE REMOVED OR LEFT IN PLACE AFTER THE SOCK HAS BEEN REMOVED SHALL BE GRADED TO CONFORM WITH THE EXISTING TOPOGRAPHY AND VEGETATED.

SILT SOCK INSTALLATION

N.T.S.

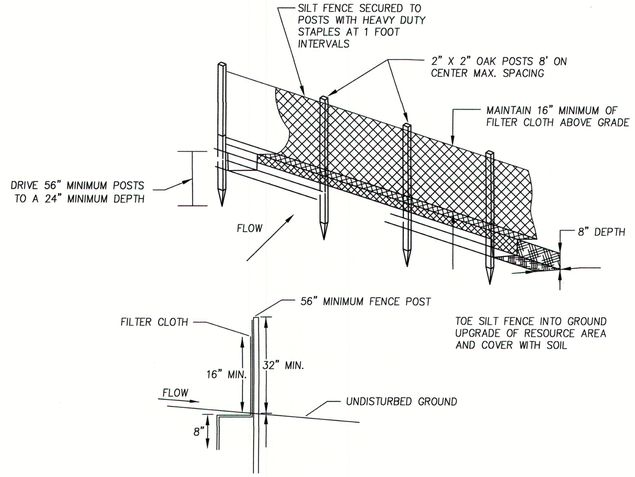

1. POSTS SHALL BE DOUBLED AND COUPLED AT FILTER CLOTH SEAMS.
2. FILTER CLOTH TO BE FASTENED SECURELY TO SUPPORT NETTING WITH TIES SPACED EVERY 24" AT TOP, MID SECTION, AND BOTTOM.
3. WHEN TWO SECTIONS OF FILTER CLOTH ADJOIN EACH OTHER, THEY SHALL BE OVERLAPPED BY 6 INCHES, FOLDED AND STAPLED.
4. MAINTENANCE SHALL BE PERFORMED AS NEEDED AND MATERIAL REMOVED WHEN "BULGES" DEVELOP IN THE SILT FENCE.

SILT FENCE INSTALLATION

N.T.S.

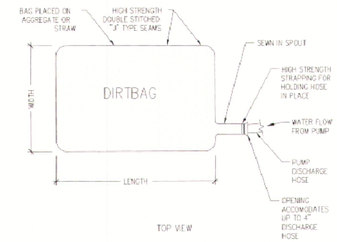

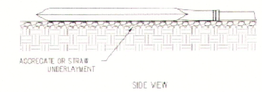

Testing Details:

Dirtbag has been tested under ASTM D-7880 and ASTM-7701. These are standard test methods for determining flow rate of water and suspended solids retention from a closed geosynthetic bag. Testing summary available upon request.

NOTE

1. "DIRTBAG" DEWATERING BAG BY ACF ENVIRONMENTAL OR APPROVED EQUAL.

TYPICAL DEWATERING DETAIL

N.T.S.

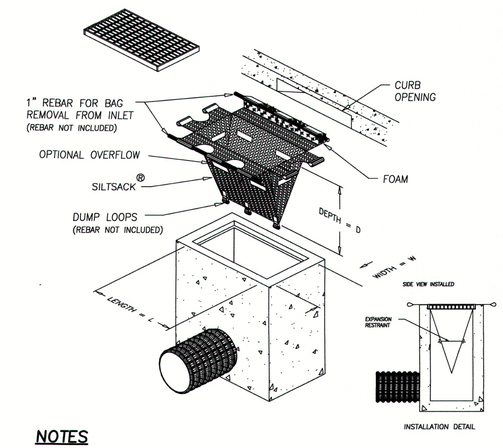

NOTES

1. TO INSTALL SILTSACK IN THE CATCH BASIN, REMOVE THE GRATE AND PLACE THE SACK IN THE OPENING. HOLD APPROXIMATELY SIX INCHES OF THE SACK OUTSIDE THE FRAME. THIS IS THE AREA OF THE LIFTING STRAPS. REPLACE THE GRATE TO HOLD THE SACK IN PLACE.
2. WHEN THE RESTRAINT CORD IS NO LONGER VISIBLE, SILTSACK IS FULL AND SHOULD BE EMPTIED.
3. TO REMOVE SILTSACK, TAKE TWO PIECES OF 1" DIAMETER REBAR AND PLACE THROUGH THE LIFTING LOOPS ON EACH SIDE OF THE SACK TO FACILITATE THE LIFTING OF SILTSACK.
4. TO EMPTY SILTSACK, PLACE UNIT WHERE THE CONTENTS WILL BE COLLECTED. PLACE THE REBAR THROUGH THE LIFT STRAPS (CONNECTED TO THE BOTTOM OF THE SACK) AND LIFT. THIS WILL LIFT SILTSACK FROM THE BOTTOM AND EMPTY THE CONTENTS. CLEAN OUT AND RINSE. RETURN SILTSACK TO ITS ORIGINAL SHAPE AND PLACE BACK IN THE BASIN.
5. SILTSACK IS REUSABLE. ONCE THE CONSTRUCTION CYCLE IS COMPLETE, REMOVE SILTSACK FROM THE BASIN AND CLEAN. SILTSACK SHOULD BE STORED OUT OF SUNLIGHT UNTIL NEXT USE.

SILT SACK DETAIL

N.T.S.

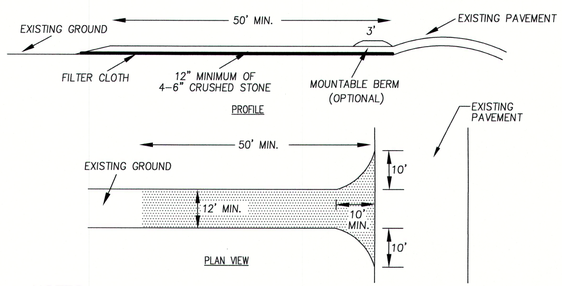

NOTES

1. STONE SHALL BE 4-6" CRUSHED STONE OR RECLAIMED STONE.
2. THE LENGTH OF THE STABILIZED ENTRANCE SHALL NOT BE LESS THAN 50'.
3. THE THICKNESS OF THE STONE FOR THE STABILIZED ENTRANCE SHALL NOT BE LESS THAN 12".
4. GEOTEXTILE FILTER CLOTH SHALL BE PLACED OVER THE ENTIRE AREA PRIOR TO PLACING THE STONE.
5. ALL SURFACE WATER THAT IS FLOWING TO OR DIVERTED TOWARD THE CONSTRUCTION ENTRANCE SHALL BE PIPED BENEATH THE ENTRANCE. IF PIPING IS IMPRACTICAL, A BERM WITH 5:1 SLOPES THAT CAN BE CROSSED BY VEHICLES MAY BE SUBSTITUTED FOR THE PIPE.
6. THE ENTRANCE SHALL BE MAINTAINED IN A CONDITION THAT WILL PREVENT TRACKING OR FLOWING OF SEDIMENT ONTO PUBLIC RIGHTS-OF-WAY. THIS MAY REQUIRE PERIODIC TOP-DRESSING WITH ADDITIONAL STONE AS CONDITIONS DEMAND AND REPAIR AND/OR CLEANOUT OF ANY MEASURES USED TO TRAP SEDIMENT. ALL SEDIMENT SPILLED, WASHED, OR TRACKED ONTO PUBLIC RIGHTS-OF-WAY MUST BE REMOVED PROMPTLY.
7. WHEELS SHALL BE CLEANED TO REMOVE MUD PRIOR TO ENTRANCE ONTO PUBLIC RIGHTS-OF-WAY. WHEN WASHING IS REQUIRED, IT SHALL BE DONE ON AN AREA STABILIZED WITH STONE WHICH DRAINS INTO AN APPROVED SEDIMENT TRAPPING DEVICE.

STABILIZED CONSTRUCTION ENTRANCE

N.T.S.

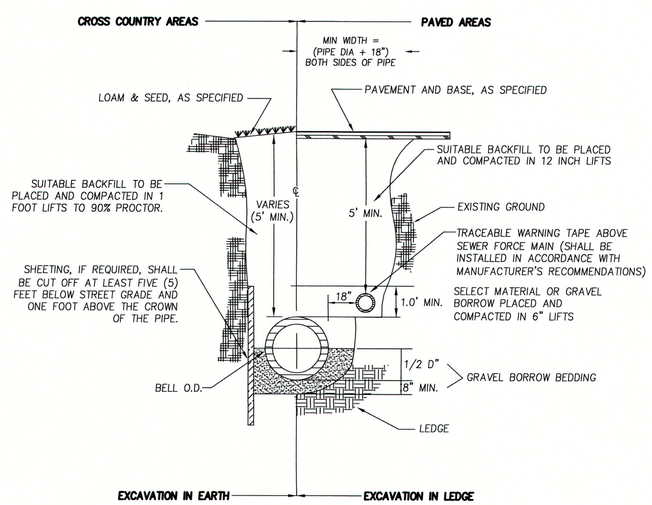

TYPICAL TRENCH DETAIL

N.T.S.

GENERAL EROSION CONTROL NOTES

1. ALL EROSION CONTROL SHALL BE INSTALLED BEFORE THE START OF CONSTRUCTION. EROSION CONTROL SHALL BE REMOVED UPON COMPLETION OF THE PROJECT AND STABILIZATION OF ALL SOIL.
2. ALL FILL SHALL BE FREE OF STUMPS AND LARGE STONES.
3. ANY STANDING BODIES OF WATER CREATED DURING EXCAVATION SHALL BE ELIMINATED.
4. ACCUMULATED SEDIMENT DEPOSITS UPSTREAM OF BARRIERS SHALL BE PROPERLY DISPOSED OF ON A REGULAR BASIS.
5. AREAS OUTSIDE THE LIMITS OF WORK (EROSION CONTROL/SILT FENCE LOCATIONS) DISTURBED BY THE CONTRACTOR DURING CONSTRUCTION SHALL BE RESTORED TO THEIR ORIGINAL CONDITION AT THE EXPENSE OF THE CONTRACTOR.
6. THE CONTRACTOR IS RESPONSIBLE FOR MAINTAINING EROSION AND/OR SEDIMENT CONTROLS DURING CONSTRUCTION. HE/SHE SHALL INSPECT CONTROLS WEEKLY AND AFTER EVERY 0.5" OF RAINFALL. REPAIRS, IF REQUIRED, SHALL BE MADE IMMEDIATELY.
7. TEMPORARY GROUND COVER SHALL BE ESTABLISHED IN AREAS OF CONSTRUCTION WHERE REQUIRED BY THE SALISBURY CONSERVATION COMMISSION.
8. ANY DISTURBED AREAS OF THE SITE NOT USED FOR ROADWAY OR UTILITY CONSTRUCTION SHALL BE STABILIZED WITH LOAM AND SEED UNTIL FURTHER DISTURBANCE IS REQUIRED FOR BUILDING CONSTRUCTION.
9. PROVIDE SILT SACK OR APPROVED EQUAL AT ALL CATCH BASINS.
10. A MINIMUM OF 6" OF LOAM SHALL BE INSTALLED ON ALL DISTURBED UNPAVED SURFACES.
11. PERMANENT SEED MIX SHALL BE MA STATE SLOPE MIXTURE (50% CREEPING RED FESCUE, 30% KENTUCKY 31 TALL FESCUE, 10% ANNUAL RYEGRASS, 5% RED TOP, 5% LADINO CLOVER) AND MA STATE PLOT MIXTURE (50% CREEPING RED FESCUE, 25% 85/80 KENTUCKY BLUEGRASS, 10% ANNUAL RYEGRASS, 10% RED TOP, 5% LADINO CLOVER)
12. WHERE PLACEMENT OF FILL IS REQUIRED FOR STORM WATER CONTROL, FILL SHALL BE PLACED IN AN UNFROZEN STATE UPON UNFROZEN GROUND. UNDER NO CIRCUMSTANCES SHALL FILL BE PLACED FROM NOVEMBER THROUGH JANUARY.
13. AN AREA SHALL BE CONSIDERED STABLE IF ONE OF THE FOLLOWING HAS OCCURRED: BASE COURSE GRAVELS HAVE BEEN INSTALLED IN AREAS TO BE PAVED; A MINIMUM OF 85% VEGETATED GROWTH HAS BEEN ESTABLISHED; A MINIMUM OF 3" OF NON-EROSIVE MATERIAL SUCH AS STONE OR RIPRAP HAS BEEN INSTALLED; OR EROSION CONTROL BLANKETS HAVE BEEN PROPERLY INSTALLED.
14. ALL PROPOSED VEGETATED AREAS WHICH DO NOT EXHIBIT A MINIMUM OF 85% VEGETATIVE GROWTH BY OCT. 15TH, OR WHICH ARE DISTURBED AFTER OCT. 15TH, SHALL BE STABILIZED BY SEEDING AND INSTALLING EROSION CONTROL BLANKETS ON SLOPES GREATER THAN 3:1, AND SEEDING AND PLACING 3 TO 4 TONS OF MULCH PER ACRE, SECURED WITH ANCHORED NETTING, ELSEWHERE. THE INSTALLATION OF EROSION CONTROL BLANKETS OR MULCH AND NETTING SHALL NOT OCCUR OVER ACCUMULATED SNOW OR ON FROZEN GROUND AND SHALL BE COMPLETED IN ADVANCE OF THAW OR SPRING MELT EVENTS.
15. ALL DITCHES OR SWALES WHICH DO NOT EXHIBIT A MINIMUM OF 85% VEGETATIVE GROWTH BY OCT. 15TH, OR WHICH ARE DISTURBED AFTER OCT. 15TH, SHALL BE STABILIZED TEMPORARILY WITH STONE OR EROSION CONTROL BLANKETS APPROPRIATE FOR THE DESIGN FLOW CONDITIONS.

CONSTRUCTION SEQUENCE

1. INSTALL EROSION CONTROL AT LIMIT OF WORK.
2. CONSTRUCT STABILIZED CONSTRUCTION ENTRANCE AS DEPICTED.
3. CLEAR AND GRUB DEBRIS AND DISPOSE OF PROPERLY.
4. STRIP, SCREEN AND STOCKPILE TOPSOIL. TOPSOIL CAN BE TEMPORARILY STOCKPILED ON SITE PROVIDING THAT THE PERIMETER OF THE STOCKPILES ARE PROPERLY STAKED WITH SILT SOCK AT THE TOE OF SLOPE.
5. GRADE PAVEMENT TO TOP OF SUBGRADE ELEVATIONS. ALL ROADWAYS MUST BE STABILIZED IMMEDIATELY AFTER GRADING.
6. BEGIN BUILDING CONSTRUCTION.
7. INSTALL UTILITIES/DRAINAGE STRUCTURES.
8. LOAM AND HYDROSEED SIDESLOPES AND ALL DISTURBED AREAS WITHIN 72 HOURS.
9. SPREAD, SHAPE, AND COMPACT PAVEMENT SUBBASE AS PER TYPICAL PAVEMENT SECTION TO ATTAIN FINAL DESIGN ELEVATIONS.
10. PERFORM BINDER COURSE PAVING.
11. LOAM AND HYDROSEED ANY DISTURBED SURFACES ALONG EDGES OF PAVEMENT AS REQUIRED.
12. PERFORM FINAL PAVING (TOP COURSE).
13. REMOVE EROSION CONTROL.

COMMONWEALTH OF MASSACHUSETTS — CHRISTOPHER M. YORK — CIVIL — No. 49181 — REGISTERED PROFESSIONAL ENGINEER — 3-17-22

PREPARED FOR

TOM PATENAUDE
P.O. BOX 5
NORTH ANDOVER, MA 01845

NO.	DATE	DESCRIPTION	BY
8	3/17/22	ADDRESS REVIEWER'S COMMENTS	C.M.Y.
7	3/3/22	ADDRESS REVIEWER'S COMMENTS	C.M.Y.
6	2/17/22	ADDRESS REVIEWER'S COMMENTS	C.M.Y.
5	1/31/22	ADDRESS REVIEWER'S COMMENTS	C.M.Y.
4	1/3/22	ADDRESS REVIEWER'S COMMENTS	C.M.Y.
3	8/5/21	ADDRESS REVIEWER'S COMMENTS	C.M.Y.
2	7/22/21	ADDRESS REVIEWER'S COMMENTS	C.M.Y.

MEI
MILLENNIUM ENGINEERING, INC.
ENGINEERING AND LAND SURVEYING
62 ELM ST. SALISBURY, MA 01952 (978) 463-8980
13 HAMPTON RD. EXETER, NH 03833 (603) 778-0528

SCALE: 1"=20' | DESG. BY: C.M.Y. | PROJECT: M203759
DATE: JUN. 3, 2021 | CHKD. BY: E.W.B.

SITE PLAN
IN
SALISBURY, MA
SHOWING
PROPOSED SITE DEVELOPMENT
AT
207 BEACH ROAD (LOTS 249-258)

EROSION CONTROL DETAILS

SHEET: C-8

Specification Sheet

allegra
Allegra Medium

Project Name _____ Qty _____

Type _____ Catalog / Part Number _____

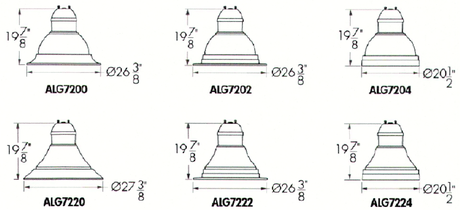

Weymouth LED Outdoor
1070 - Small Sconce
1071 - Large Sconce

Project Name _____
Fixture Type _____
Quantity _____

Norwell | Lighting
ILEX
Custom Metalcraft

Weymouth Large
1071-GM-WA

Weymouth Large
1070-GM-WA

1071 Large

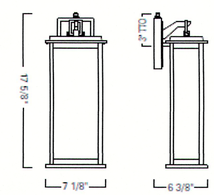

1070 Small

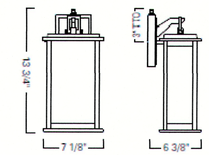

Built in LED photo sensor

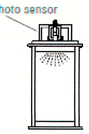

Statistics						
Description	Symbol	Avg	Max	Min	Max/Min	Avg/Min
Outside of Roadway	+	0.1 fc	3.7 fc	0.0 fc	N/A	N/A
Roadway	+	1.3 fc	3.9 fc	0.2 fc	19.5:1	6.5:1

Schedule

Symbol	Label	QTY	Manufacturer	Catalog Number	Description	Lamp	Filename	Lumens per Lamp	LLF
	S3	4	Lumenpulse	ALG7200 XXX SSL M80 30K CRI80 3BLS BK DIM	Allegra post-mounted fixture; mounted at 14ft	LED	ALG-120_277-CSL-M80-30K-CRI 80-3 BLS.ies	3952	0.9
	W1	17	Norwell Lighting	1070 GM WA LED	Weymouth LED Exterior Sconce; mounted at 16ft AFF (at deck)	LED	7326-B12-35K.ies	672	0.6
	W2	11	Norwell Lighting	1070 GM WA LED	Weymouth LED Exterior Sconce; mounted at 6ft	LED	7326-B12-35K.ies	672	0.6

Site Lighting Layout
At
207 BEACH ROAD

Designer
Heidi G. Connors
Visible Light, Inc.
24 Stickney Terrace
Suite 6
Hampton, NH 03842

Date
3/17/2022
Scale
1"=20'
Drawing No.

Summary

E-1

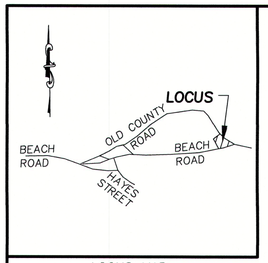

LOCUS MAP
N.T.S.

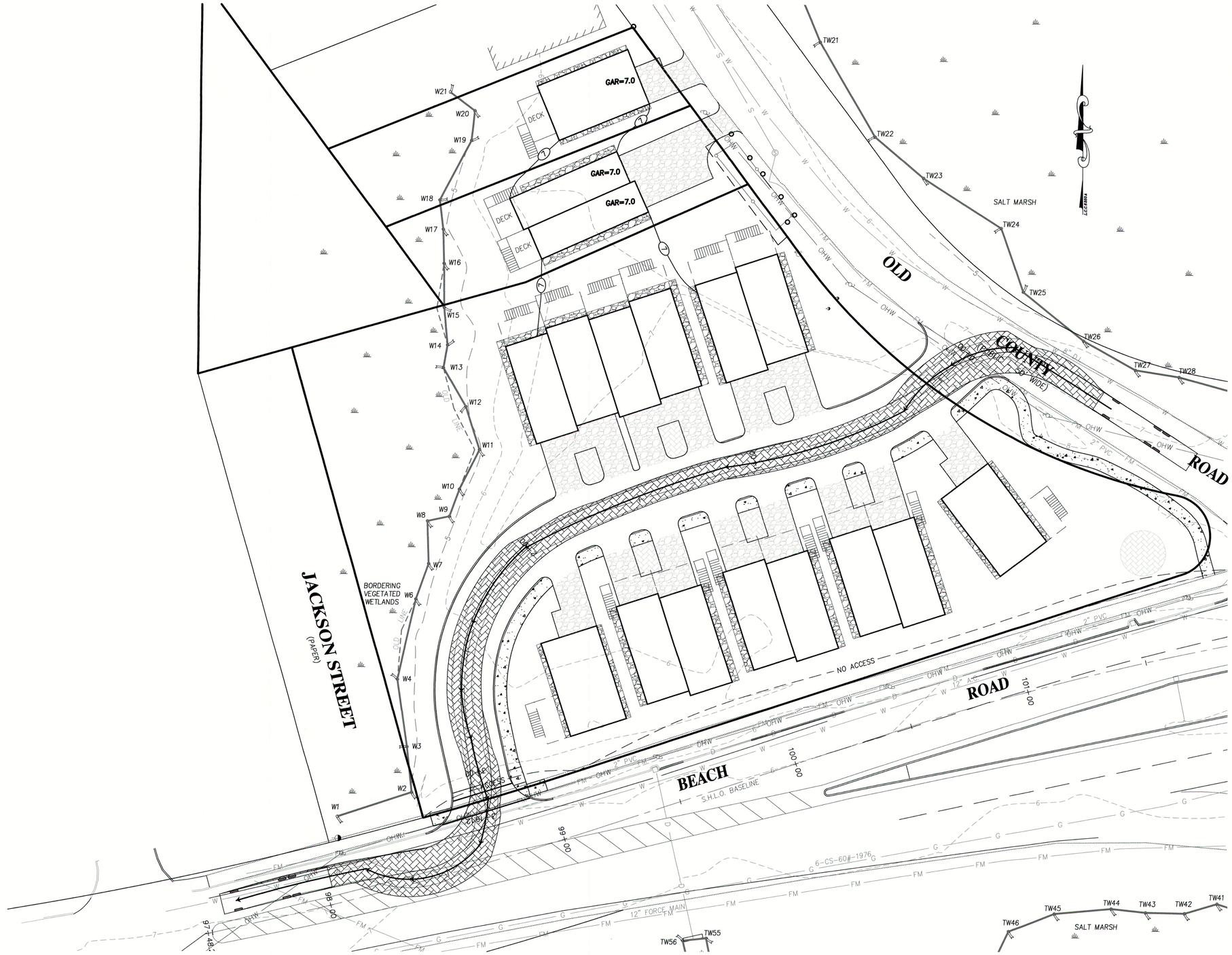

LEGEND

- EXIST. CONTOUR (110)
- PROP. CONTOUR (111)
- PROP. TREELINE
- PROP. RETAINING WALL
- SF — PROP. SILT FENCE
- RD — PROP. PERFORATED ROOF DRAIN
- PROP. GUTTER INLET
- 7.6 PROP. SPOT GRADE
- PROP. OUTLET STRUCTURE
- EXIST. CATCH BASIN
- EXIST. UTILITY POLE
- WETLANDS
- EXIST. TEST PIT

GRAPHIC SCALE

20 0 10 20 40 80

(IN FEET)
1 inch = 20'

COMMONWEALTH OF MASSACHUSETTS
CHRISTOPHER M. YORK
CIVIL
No. 49181
REGISTERED PROFESSIONAL ENGINEER
3-17-22

PREPARED FOR

TOM PATENAUDE
P.O. BOX 5
NORTH ANDOVER, MA 01845

NO.	DATE	DESCRIPTION	BY
8	3/17/22	ADDRESS REVIEWER'S COMMENTS	C.M.Y.
7	3/3/22	ADDRESS REVIEWER'S COMMENTS	C.M.Y.
6	2/17/22	ADDRESS REVIEWER'S COMMENTS	C.M.Y.
5	1/31/22	ADDRESS REVIEWER'S COMMENTS	C.M.Y.
4	1/3/22	ADDRESS REVIEWER'S COMMENTS	C.M.Y.
3	8/5/21	ADDRESS REVIEWER'S COMMENTS	C.M.Y.
2	7/22/21	ADDRESS REVIEWER'S COMMENTS	C.M.Y.

MEI
MILLENNIUM ENGINEERING, INC.
ENGINEERING AND LAND SURVEYING
62 ELM ST. SALISBURY, MA 01952 (978) 463-8980
13 HAMPTON RD. EXETER, NH 03833 (603) 778-0528

SCALE: 1"=20' | DESG. BY: C.M.Y.
DATE: JUN. 3, 2021 | CHKD. BY: E.W.B.
PROJECT: M203759

SITE PLAN
IN
SALISBURY, MA

SHOWING
PROPOSED SITE DEVELOPMENT
AT
207 BEACH ROAD (LOTS 249-258)

FIRE TRUCK TEMPLATE

SHEET: F-1

E:\Data\proj-2020\M203759\Dwg\M203759-D.dwg 3/16/2022 11:17:07 AM EDT

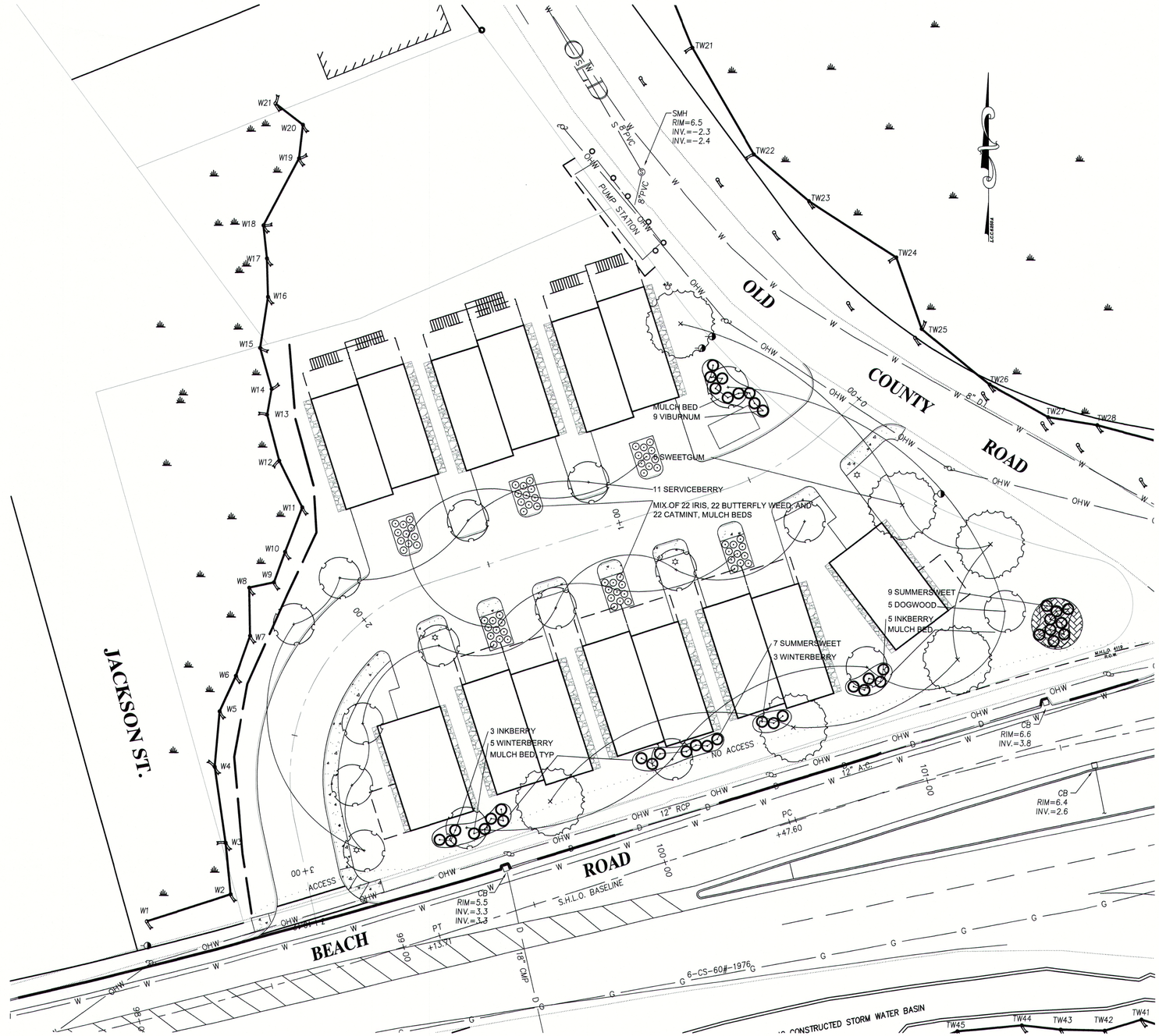

Notes:
1. Planting period shall be noted as March15-May 15 and Sept 15-Nov 15, weather permitting.
2. Owner is responsible for maintaining live vegetation and the maintenance, removal, and replacement of all dead trees, shrubs, groundcover, and perennials.

Plant List

Qty.	Scientific Name	Common Name	Size	Notes
Trees				
11	Amelanchier canadensis	Serviceberry	2-2.5" cal.	
5	Cornus x 'Rutban'	Dogwood	2-2.5" cal.	
6	Liquidambar styraciflua	Sweetgum	2.5-3" cal.	
Shrubs				
16	Clethra alnifolia	Summersweet	5 gal.	
8	Ilex glabra	Inkberry	5 gal.	
8	Ilex verticillata	Winterberry	5 gal.	
9	Viburnum opulus	Cranberrybush Viburnum	5 gal.	
Perennials				
22	Asclepias tuberosa	Butterfly Weed	1 gal.	
22	Iris versicolor	Flag Iris	1 gal.	
22	Nepeta 'Walker's Low'	Catmint	1 gal.	

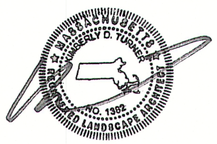

GRAPHIC SCALE

20 0 10 20 40 80

(IN FEET)
1 inch = 20'

PREPARED FOR

TOM PATENAUDE
P.O. BOX 5
NORTH ANDOVER, MA 01845

NO.	DATE	DESCRIPTION	BY
5	8/20/21	FOR REVIEW	KT
4	8/3/21	FOR REVIEW	KT
3	7/17/21	FOR REVIEW	KT
2	6/22/21	FOR REVIEW	KT
1	5/25/21	FOR REVIEW	KT

KDTurner Design
landscape architecture
27 High St.
Newburyport, MA 01950
ph) 781.632.6004

SCALE: 1"=20'
DATE: MAY 20, 2021

LANDSCAPE PLAN
IN
SALISBURY, MA

SHOWING
PROPOSED SITE DEVELOPMENT
AT
OLD COUNTY ROAD AND BEACH ROAD

L-1