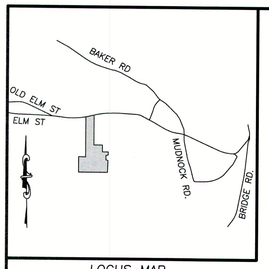

LOCUS MAP
N.T.S.

COMMERCIAL DEVELOPMENT AT 163 ELM STREET IN SALISBURY, MA

JUNE 2022

SALISBURY PLANNING BOARD APPROVAL

_____

_____

_____

_____

_____

_____
DATE

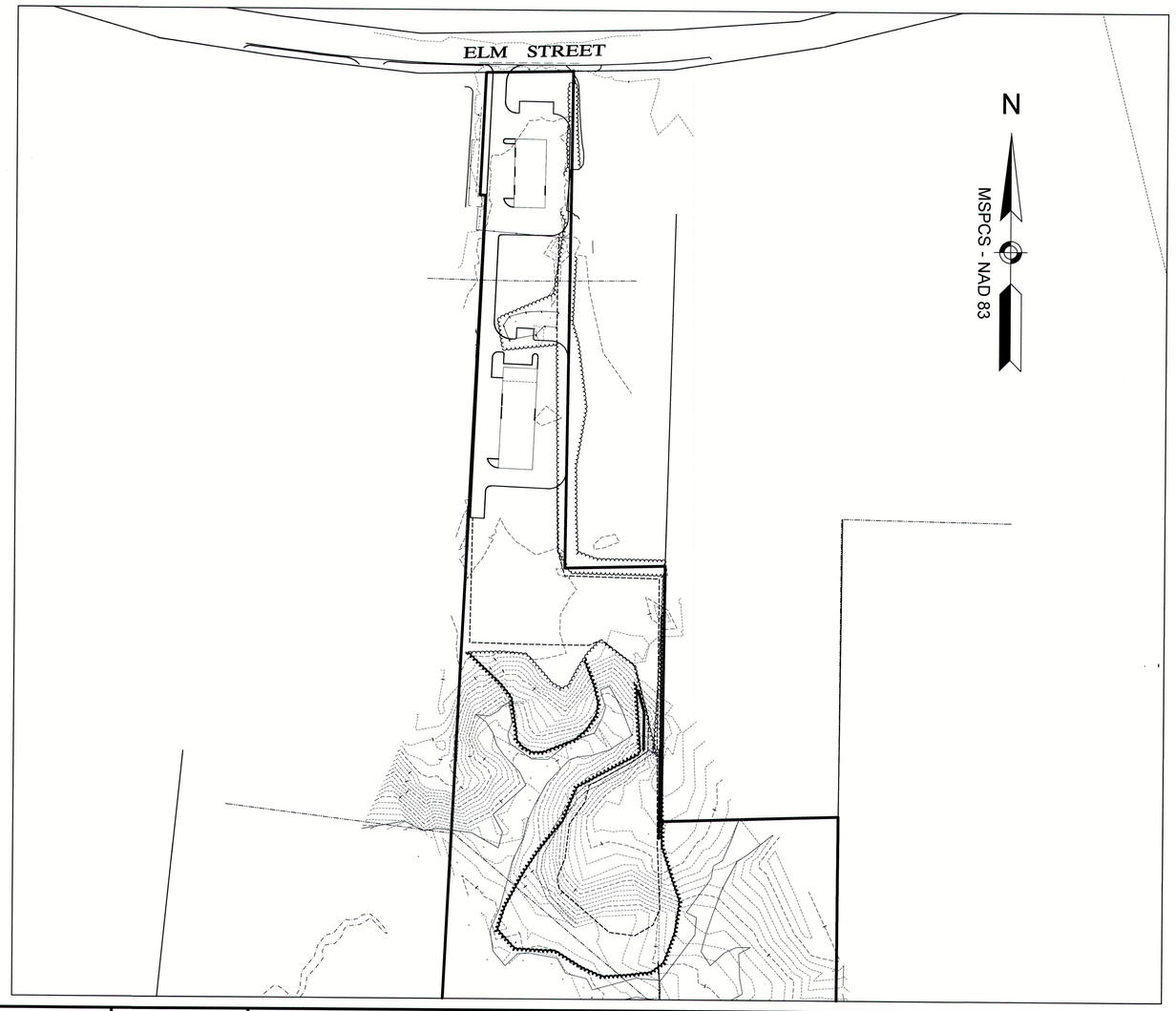

9
31

RECORD OWNER

F & D REALTY LLC
1 MELVIN STREET
WAKEFIELD, MA 01880
BK. 39992 PG. 477

ZONING TABLE

163 ELM STREET – ASSESSORS MAP 9 LOT 31
ZONING DISTRICT COMMERCIAL (C)

	REQUIRED	EXISTING	PROPOSED
LOT AREA:	½ AC.	25.04 AC.	25.04 AC.
LOT FRONTAGE:	100 FT.	153.00 FT	153.00 FT
FRONT SETBACK:	50 FT	**	127.9 FT
SIDE SETBACK:	20 FT./30 FT.	**	68.7 FT
REAR SETBACK:	20 FT.	**	> 2000 FT
LOT COVERAGE:	25% MAX	**	1.6%
PARKING SPACES:	5	**	6
BLDG HEIGHT:	35 FT.	**	< 35 FT.

ZONING TABLE

163 ELM STREET – ASSESSORS MAP 9 LOT 31
ZONING DISTRICT OFFICE PARK (C–3)

	REQUIRED	EXISTING	PROPOSED
LOT AREA:	2½ AC.	25.04 AC.	25.04 AC.
LOT FRONTAGE:	150 FT.	153.00 FT	153.00 FT
FRONT SETBACK:	30 FT	**	521.2 FT
SIDE SETBACK:	25 FT.	**	69.7 FT
REAR SETBACK:	40 FT.	**	> 1600 FT
LOT COVERAGE:	40% MAX	**	1.6%
PARKING SPACES:	**	**	8
BLDG HEIGHT:	35 FT.	**	< 35 FT.

PLAN INDEX

GRAPHIC SCALE
120 0 60 120 240 480
(IN FEET)
1 inch = 120'

COMMONWEALTH OF MASSACHUSETTS
CHRISTOPHER M. YORK
CIVIL
No. 49181
REGISTERED PROFESSIONAL ENGINEER
6-21-22

PREPARED FOR

F & D REALTY LLC
1 MELVIN STREET, SUITE D
WAKEFIELD, MA 01880

NO.	DATE	DESCRIPTION	BY
1	6/21/22	ADDRESS TOWN COMMENTS	C.M.Y.

MEI
MILLENNIUM ENGINEERING, INC.
ENGINEERING AND LAND SURVEYING
62 ELM ST. SALISBURY, MA 01952 (978) 463–8980
13 HAMPTON RD. EXETER, NH 03833 (603) 778–0528

SCALE: 1"=120'
DATE: JUN. 1, 2022
DESG. BY: C.M.Y.
CHKD. BY: E.W.B.
PROJECT: M183284

PLAN OF LAND
IN
SALISBURY, MA
SHOWING
PROPOSED SITE IMPROVEMENTS
AT
163 ELM STREET

COVER SHEET

SHEET: C–1

E:\sdskproj-2018\M183284\dwg\M183284-D (C3D).dwg, 6/22/2022 11:07:28 AM

WETLAND DELINEATED BY:
WEST ENVIRONMENTAL
(DELINEATED: JANUARY 2022)

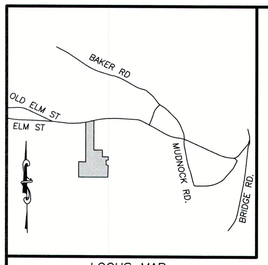

LOCUS MAP
N.T.S.

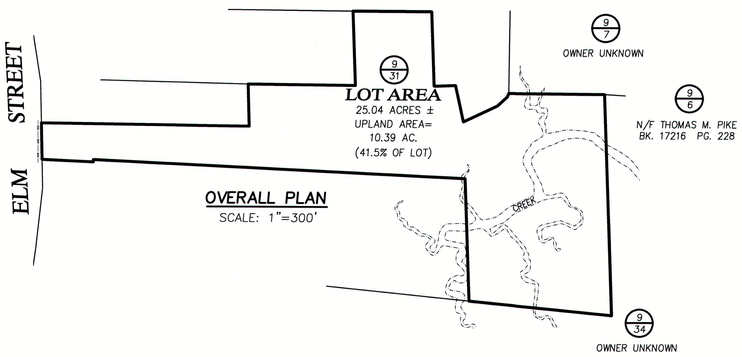

OVERALL PLAN
SCALE: 1"=300'

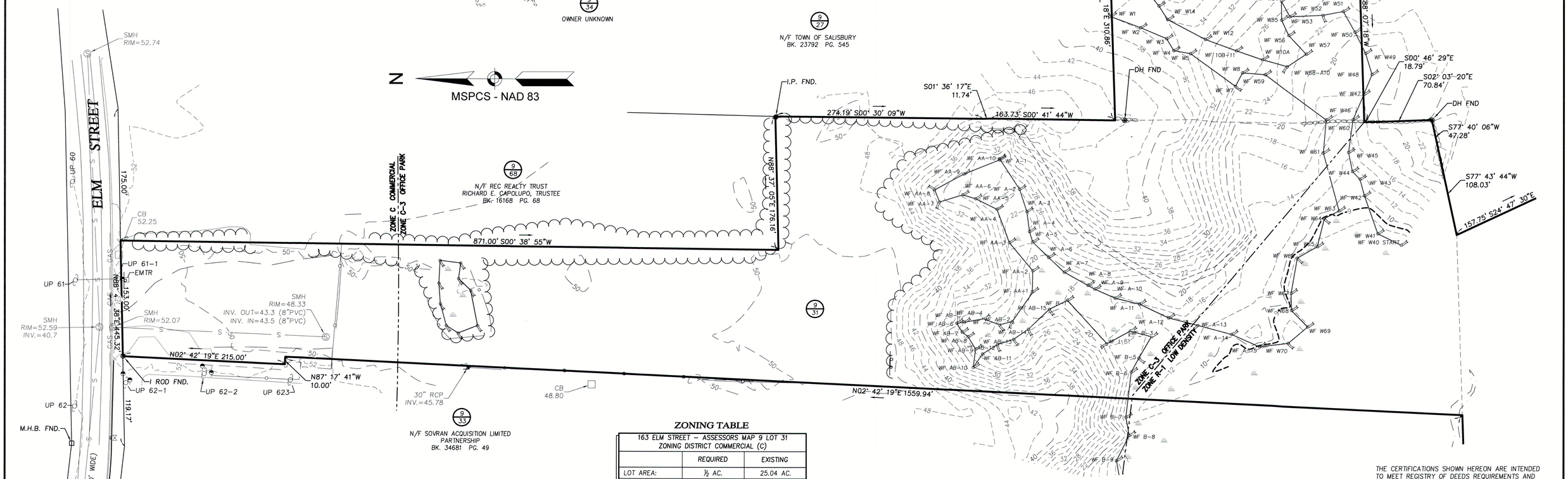

LEGEND

M.H.B.	MASSACHUSETTS HIGHWAY BOUND		SEWER MAN HOLE
D.H.	DRILL HOLE	CB	CATCH BASIN
I.P.	IRON PIPE	UP	UTILITY POLE
I ROD FND.	IRON ROD FOUND		GUY WIRE
	STONE WALL	OHW	OVERHEAD WIRE
0/00	ASSESSORS MAP ASSESSORS PARCEL		HYDRANT
		GV	GAS VALVE
50	EXISTING ELEVATION CONTOUR	WV	WATER VALVE
WF A-29	WETLAND FLAG & DESIGNATION	D	DRAINAGE
	WETLAND AREA	W	WATER
C.L.F.	CHAIN LINK FENCE	S	SEWER
		G	GAS

ZONING TABLE

163 ELM STREET – ASSESSORS MAP 9 LOT 31
ZONING DISTRICT COMMERCIAL (C)

	REQUIRED	EXISTING
LOT AREA:	½ AC.	25.04 AC.
LOT FRONTAGE:	100 FT.	153.00 FT
FRONT SETBACK:	50 FT	**
SIDE SETBACK:	20 FT./30 FT.	**
REAR SETBACK:	20 FT.	**
LOT COVERAGE:	25% MAX	**
OPEN SPACE:	**	**
BLDG HEIGHT:	35 FT.	**

163 ELM STREET – ASSESSORS MAP 9 LOT 31
ZONING DISTRICT OFFICE PARK (C-3)

	REQUIRED	EXISTING
LOT AREA:	2½ AC.	25.04 AC.
LOT FRONTAGE:	150 FT.	153.00 FT
FRONT SETBACK:	30 FT	**
SIDE SETBACK:	25 FT.	**
REAR SETBACK:	40 FT.	**
LOT COVERAGE:	40% MAX	**
OPEN SPACE:	**	**
BLDG HEIGHT:	35 FT.	**

BASIS OF BEARINGS
MASS. STATE PLANE COORDINATE SYSTEM
NAD-83

OWNER OF RECORD
F & D REALTY LLC
BK. 39992 PG. 477

PLAN REFERENCES
PLAN BOOK 406 PLAN 81
1911 S.H.L.O. ROUTE 110

THE CERTIFICATIONS SHOWN HEREON ARE INTENDED TO MEET REGISTRY OF DEEDS REQUIREMENTS AND ARE NOT A CERTIFICATION TO TITLE OR OWNERSHIP OF PROPERTY SHOWN. OWNERS OF ADJOINING PROPERTIES ARE ACCORDING TO CURRENT TOWN OF SALISBURY ASSESSORS RECORDS.

I CERTIFY:
THAT THE PROPERTY LINES SHOWN ARE THE LINES OF EXISTING OWNERSHIP AND THE LINES OF STREETS AND WAYS SHOWN ARE THE LINES OF STREETS AND WAYS ALREADY EXISTING AND THAT NO NEW LINES FOR THE DIVISION OF EXISTING OWNERSHIP OR FOR NEW STREETS OR WAYS ARE SHOWN.

I CERTIFY:
THAT THIS ACTUAL SURVEY WAS MADE ON THE GROUND FROM DECEMBER 2021 TO APRIL 2022.

COMMONWEALTH OF MASSACHUSETTS
JEFFREY S. HOFMANN
#36381
PROFESSIONAL LAND SURVEYOR

6/21/22
PROFESSIONAL LAND SURVEYOR — DATE

GRAPHIC SCALE
60 0 30 60 120 240
(IN FEET)
1 inch = 60'

PREPARED FOR

F & D REALTY LLC
1 MELVIN STREET, SUITE C
WAKEFIELD, MA 01880
(MAP 9 – LOT 31)

NO.	DATE	DESCRIPTION	BY
1	6/21/22	ADDRESS TOWN COMMENTS	C.M.Y.

MEI
MILLENNIUM ENGINEERING, INC.
ENGINEERING AND LAND SURVEYING
62 ELM ST. SALISBURY, MA 01952 (978) 463-8980
13 HAMPTON RD. EXETER, NH 03833 (603) 778-0528

SCALE: 1"=60' | CALC. BY: P.D.B.
DATE: JUN. 1, 2022 | CHKD. BY: J.S.H.
PROJECT: M183284

PLAN OF LAND
IN
SALISBURY, MA
SHOWING
PROPOSED SITE IMPROVEMENTS
AT
163 ELM STREET

EXISTING CONDITIONS

SHEET: C-2

E:\sdskproj-2018\M183284\dwg\M183284-B (C3D).dwg, 6/22/2022 11:08:03 AM

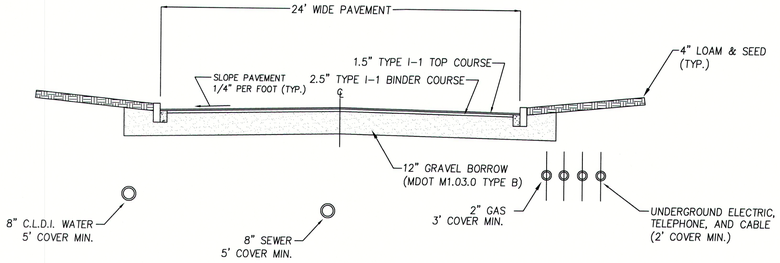

ROADWAY CROSS-SECTION
STA. 0+00 TO STA. 7+96±

N.T.S.

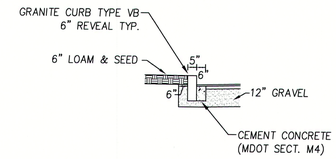

TYPICAL GRANITE CURBING INSTALLATION DETAIL

N.T.S.

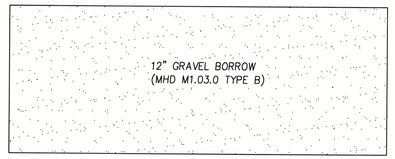

GRAVEL DETAIL

N.T.S.

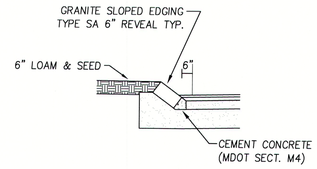

TYPICAL SLOPED EDGING DETAIL

N.T.S.

LEGEND

EXISTING	PROPOSED	
□	■CB	CATCH BASIN (OR GUTTER INLET, OR LEACHING BASIN)
⊥	■CBCI (OR GICI)	CATCH BASIN (OR GUTTER INLET) WITH CURB INLET
		CURB (OR BERM) – TYPE NOTED
		EDGE OF ROAD
—109—	108	CONTOUR
Ⓢ	Ⓢ	SEWER MANHOLE
Ⓓ	Ⓓ	DRAINAGE MANHOLE
GV		GAS GATE
WV	⋈	WATER GATE
		SEPTIC TANK
		HYDRANT
○ FA	● FA	FIRE ALARM BOX
☼	✱	POST MOUNTED PEDESTRIAN LIGHT
		UTILITY POLE
—D—	—D—	DRAIN PIPE
—S—	—S—	SEWER MAIN
—S—		SEWER FORCE MAIN
—UE—	—UE—	UNDERGROUND ELECTRIC
—W—	—W—	WATER MAIN
□MB	■MB	MAIL BOX
		HIGHWAY GUARD (TYPE NOTED)
—x—x—	—x—x—	FENCE (SIZE AND TYPE NOTED)
		EASEMENT LINE
		PROPERTY LINE
		100 FT BUFFER ZONE
8 N00°00'00"E +12.34		BASE OR SURVEY LINE
	PC 8 N00°00'00"E +12.34	CONSTRUCTION BASELINE
		WHEELCHAIR RAMP (WCR)
		CONCRETE SIDEWALK
		HAND CORE
	—SF—	SILT SOCK
		WETLAND

SURVEY

120	WETLAND DELINEATION FLAG
⊡ C.B.	CONCRETE BOUND
⊡ S.B.	STONE BOUND
◉ D.H.	DRILL HOLE
PK	MASONRY NAIL
I.P.	IRON PIPE
◉ I ROD	IRON ROD
FND.	FOUND
N/FND.	NOT FOUND
0/00	ASSESSORS MAP AND PARCEL

GENERAL NOTES

1. THE CONTRACTOR SHALL REPORT TO THE OWNER AND ENGINEER ANY SIGNIFICANT VARIATIONS IN EXISTING SITE CONDITIONS. ANY PROPOSED REVISIONS TO THE WORK SHALL NOT BE UNDERTAKEN UNTIL REVIEWED AND APPROVED BY THE OWNER AND REGULATING CITY AND/OR STATE AGENCIES.
2. THE CONTRACTOR SHALL INSTALL ALL SYSTEM COMPONENTS IN ACCORDANCE WITH THE MANUFACTURER'S SPECIFICATIONS AND ALL APPLICABLE ELECTRICAL, PLUMBING, AND SANITARY CODES.
3. ALL WORK SHALL CONFORM TO; THE SALISBURY PLANNING BOARD RULES AND REGULATIONS GOVERNING THE SUBDIVISION OF LAND, THE WETLANDS PROTECTION ACT (310 CMR 10.00), THE ORDER OF CONDITIONS ISSUED BY THE SALISBURY CONSERVATION COMMISSION, TOWN OF SALISBURY ZONING CODE, CHAPTER 300. ZONING; ARTICLE III. USE REGULATIONS; ARTICLE IV. DIMENSIONAL REGULATIONS; TABLE C-4 OFF STREET PARKING STANDARDS; ARTICLE XVIII. SITE PLAN REVIEW; CHAPTER 465. PLANNING BOARD, §465 10-13; AND PLANNING BOARD RULES AND REGULATIONS, III. SITE PLAN REVIEW.
4. THE LOCATION OF ALL UTILITIES, AS SHOWN ON THESE PLANS, ARE BASED UPON PLANS AND RECORD INFORMATION PROVIDED BY MUNICIPAL AND PRIVATE UTILITY COMPANIES AND ARE CONSIDERED APPROXIMATE BOTH AS TO SIZE AND LOCATION. NO WARRANTY IS MADE AS TO THE ACCURACY OF THESE LOCATIONS OR THAT ALL UTILITIES ARE SHOWN. THE CONTRACTOR SHALL NOT RELY ON THESE PLANS FOR SUCH INFORMATION AND WILL MAKE EXAMINATIONS IN THE FIELD BY VARIOUS AVAILABLE RECORDS, UTILITY COMPANIES AND INDIVIDUALS, AS TO THE LOCATION OF ALL SUBSURFACE STRUCTURES.
5. THE CONTRACTOR SHALL VERIFY THE LOCATION OF EXISTING UTILITIES BY CONTACTING "DIG-SAFE" AT LEAST 72 HOURS PRIOR TO ANY EXCAVATION. DIG-SAFE TELEPHONE NUMBER: 1-888-344-7233.
6. THE CONTRACTOR SHALL FIELD CHECK ALL DIMENSIONS AND ELEVATIONS BEFORE PROCEEDING WITH THE NEW WORK. HE/SHE SHALL EXCAVATE TO VERIFY PERTINENT DRAINAGE INVERTS AND POTENTIAL UTILITY CONFLICTS. ANY DISCREPANCIES SHALL BE REPORTED TO THE OWNER IMMEDIATELY.
7. ALL EXISTING STRUCTURES AND SURFACES, UNLESS OTHERWISE SHOWN, SHALL BE COMPLETELY REMOVED FROM THE AREAS OF WORK. ALL TREES SCHEDULED FOR REMOVAL SHALL BE FIELD MARKED AND APPROVED FOR REMOVAL BY THE OWNER PRIOR TO CUTTING OPERATIONS.
8. THE CONTRACTOR IS RESPONSIBLE FOR INITIATING, MAINTAINING AND SUPERVISING ALL SAFETY PRECAUTIONS AND PROGRAMS IN CONNECTION WITH THE WORK. THE CONTRACTOR SHALL TAKE ALL NECESSARY PRECAUTIONS FOR THE SAFETY OF THE PUBLIC, EMPLOYEES, AND ALL OTHER PERSONS ASSOCIATED WITH THE PROJECT. HE/SHE SHALL COORDINATE AND BE RESPONSIBLE FOR ALL SAFETY SIGNING, BARRIERS AND TEMPORARY PAVEMENT MARKINGS NECESSARY TO PROVIDE A SMOOTH AND PROPER TRANSITION FOR TRAFFIC FLOW.
9. IF REQUIRED BY THE CONTRACTOR, OVERHEAD LINES SHALL BE RELOCATED BY THE UTILITY COMPANY AT THE CONTRACTORS EXPENSE.
10. ALL SEWER MAINS AND SERVICES SHALL BE INSTALLED AT LEAST 10 FEET HORIZONTALLY OR 18 INCHES VERTICALLY FROM PROPOSED WATER MAINS AND SERVICES AND SHALL MAINTAIN 5 FEET OF COVER OVER THE TOP OF THE PIPING, UNLESS OTHERWISE SHOWN OR APPROVED. PIPES SHALL BE ENCASED IN CONCRETE WHERE THIS SEPARATION CANNOT BE OBTAINED.
11. ALL WATER MAINS SHALL BE INSTALLED WITH A MINIMUM OF 5 FEET OF COVER OVER THE TOP OF THE PIPE, UNLESS OTHERWISE SHOWN OR APPROVED.
12. WHENEVER SEWER MAINS MUST CROSS WATER MAINS, THE SEWER SHALL BE CONSTRUCTED AS FOLLOWS; A) JOINTS SHALL BE MECHANICAL TYPE WATER PRESSURE RATED WITH ZERO LEAKAGE WHEN TESTED AT 25 PSI FOR GRAVITY SEWERS AND 1.5 TIMES WORKING PRESSURE FOR FORCE MAINS AND JOINTS NOT TO BE LOCATED WITHIN 9 FEET OF THE CROSSING; B) SEWER SERVICES SHOULD BE INSTALLED A MINIMUM OF 18 INCHES BELOW WATER MAINS. IF SEPARATION IS LESS THAN 18 INCHES, SEWER SERVICE SHALL BE CONCRETE ENCASED OR CONSTRUCTED WITH PRESSURE CLASS PVC FOR A DISTANCE OF 10 FEET EACH SIDE OF THE WATER MAIN. 10-FOOT MINIMUM HORIZONTAL SEPARATION DISTANCE SHALL BE MAINTAINED.
13. INDIVIDUAL BUILDING OWNERS ARE RESPONSIBLE FOR MAINTENANCE OF THEIR SEWER SERVICE FROM THE BUILDING TO THE CONNECTION TO THE SEWER MAIN.
14. ALL SIGNS AND PAVEMENT MARKINGS TO BE INSTALLED WITHIN THE PROJECT SITE SHALL CONFORM TO THE APPLICABLE SPECIFICATIONS OF THE MANUAL ON UNIFORM TRAFFIC CONTROL DEVICES (MUTCD).
15. 14 DAYS PRIOR TO COMMENCING CONSTRUCTION, THE OWNER/DEVELOPER SHALL PRESENT A CONSTRUCTION SCHEDULE TO THE PLANNING DEPARTMENT.
16. THE OWNER/DEVELOPER SHALL SUBMIT TWO HARD COPIES OF AS-BUILT DRAWINGS TO THE PLANNING BOARD PRIOR TO FINAL OCCUPANCY. AS BUILTS SHALL INCLUDE ALL LANDBASE AND UTILITIES INFORMATION.
17. ONSITE BURIAL OF STUMPS OR ANY OTHER DEBRIS IS PROHIBITED.
18. THE REAR OF THE PROPERTY LIES WITHIN THE 100-YEAR FLOOD PLAIN (AE 9) ACCORDING TO F.I.R.M. COMMUNITY PANEL NUMBER 25009C 0109F.
19. ALL ELEVATIONS ARE BASED ON N.A.V.D. 1988.

MATERIAL NOTES

ALL MATERIALS OF THE ELEMENTS IN THE SITE PLAN MUST CONFORM TO THE FOLLOWING STANDARDS:

1. COMMONWEALTH OF MASSACHUSETTS DEPARTMENT OF TRANSPORTATION STANDARD SPECIFICATIONS FOR HIGHWAYS AND BRIDGES (LATEST EDITION)
2. 521 CMR RULES AND REGULATIONS OF THE ARCHITECTURAL ACCESS BOARD (AAB) AND THE AMERICANS WITH DISABILITIES ACT (ADA)
3. SPECIFICATIONS BY THE TOWN OF SALISBURY AS SET FORTH BY SECTION 7 DESIGN STANDARDS IN THE PLANNING BOARD RULES AND REGULATIONS GOVERNING THE SUBDIVISION OF LAND, DATED NOVEMBER 1, 2013
4. UTILITIES INSTALLED PER PENNICHUCK WATER SERVICE CORPORATION SPECIFICATIONS

ROADWAY NOTES

1.) ALL STUMPS, ROCKS, PEAT AND LEDGE WITHIN THE LIMITS OF THE PROPOSED PAVED WAY SHALL BE REMOVED. ALL LEDGE SHALL BE REMOVED TO A MINIMUM DEPTH OF 2' BELOW FINISHED PAVEMENT GRADE.

2.) ROADWAY SHALL NOT BE CONSTRUCTED DURING FREEZING WEATHER OR ON WET OR FROZEN SUBGRADE.

3.) GRADING AND ROLLING SHALL BE REQUIRED TO PROVIDE A SMOOTH, EVEN, AND UNIFORM COMPACTED BASE WHICH IS COMPACTED TO A MINIMUM DRY DENSITY OF 95 PERCENT.

4.) THE MINIMUM SLOPE FROM THE CROWN OF FINISHED BASE COURSE SHALL BE 1/4" PER FOOT UNLESS OTHERWISE SHOWN.

5.) ALL UNSUITABLE MATERIAL SHALL BE EXCAVATED AND REPLACED WITH SATISFACTORY MATERIAL AND BROUGHT UP TO GRADE WITH GRAVEL BORROW CONTAINING NO STONES GREATER THAN 6" DIAMETER.

6.) AT ALL TIMES DURING CONSTRUCTION, THE SUB-GRADE AND ALL DITCHES SHALL BE CONSTRUCTED AND MAINTAINED SO THAT THE ROADWAY WILL EFFECTIVELY BE DRAINED.

7.) THE CONTRACTOR SHALL REFER TO THE SALISBURY PLANNING BOARD RULES AND REGULATIONS GOVERNING THE SUBDIVISION OF LAND, SECTIONS I – VII.

COMMONWEALTH OF MASSACHUSETTS
CHRISTOPHER M. YORK
CIVIL
No. 49181
REGISTERED PROFESSIONAL ENGINEER
6-21-22

PREPARED FOR

F & D REALTY LLC
1 MELVIN STREET, SUITE D
WAKEFIELD, MA 01880

NO.	DATE	DESCRIPTION	BY
1	6/21/22	ADDRESS TOWN COMMENTS	C.M.Y.

MEI
MILLENNIUM ENGINEERING, INC.
ENGINEERING AND LAND SURVEYING
62 ELM ST. SALISBURY, MA 01952 (978) 463-8980
13 HAMPTON RD. EXETER, NH 03833 (603) 778-0528

SCALE: AS NOTED | DESG. BY: C.M.Y.
DATE: JUN. 1, 2022 | CHKD. BY: E.W.B.
PROJECT: M183284

PLAN OF LAND
IN
SALISBURY, MA

SHOWING

PROPOSED SITE IMPROVEMENTS
AT
163 ELM STREET

TYPICAL SECTIONS/ LEGEND/ GENERAL NOTES

SHEET: C-3

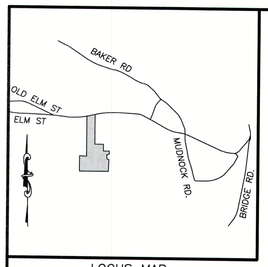

LOCUS MAP
N.T.S.

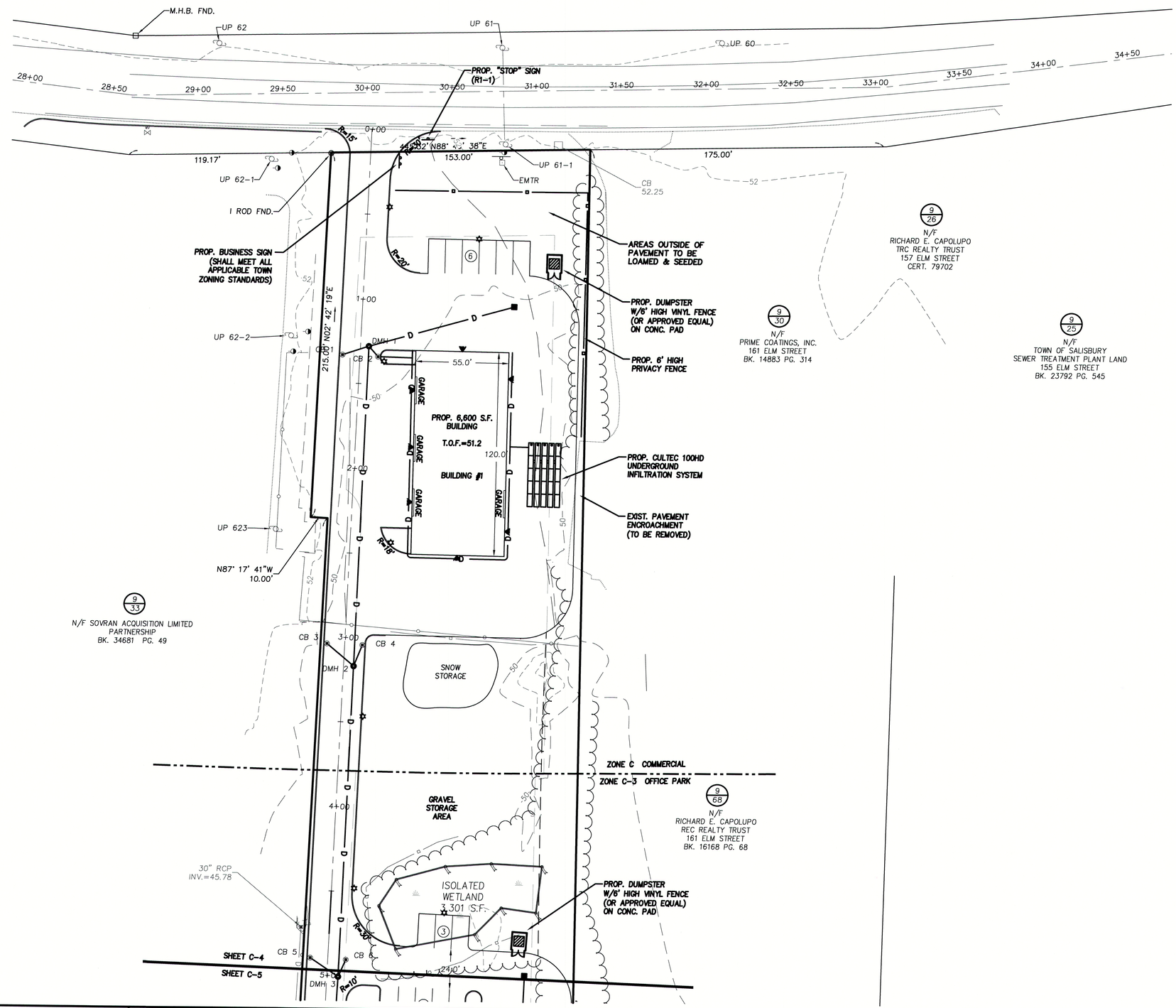

LEGEND

W	EXISTING WATER MAIN
S	EXISTING SEWER MAIN
W	PROPOSED WATER SERVICE
S	PROPOSED SEWER MAIN
SS	PROPOSED SEWER SERVICE
G	PROPOSED GAS MAIN
GS	PROPOSED GAS SERVICE
UU	PROPOSED UNDERGROUND UTILITIES
	PROPOSED WATER GATE
	PROP. VERTICAL GRAN. CURB
	PROP. SLOPED GRAN. EDGING
	PROPOSED STREET LIGHT
	EXISTING FIRE HYDRANT
	PROPOSED WATER SHUTOFF
	PROPOSED SEWER SERVICE
	PROPOSED BUILDING LIGHT

GRAPHIC SCALE
30 0 15 30 60 120
(IN FEET)
1 inch = 30'

COMMONWEALTH OF MASSACHUSETTS
CHRISTOPHER M. YORK
CIVIL
No. 49181
REGISTERED PROFESSIONAL ENGINEER
6-21-22

PREPARED FOR

F & D REALTY LLC
1 MELVIN STREET, SUITE D
WAKEFIELD, MA 01880

NO.	DATE	DESCRIPTION	BY
1	6/21/22	ADDRESS TOWN COMMENTS	C.M.Y.

MEI
MILLENNIUM ENGINEERING, INC.
ENGINEERING AND LAND SURVEYING
62 ELM ST. SALISBURY, MA 01952 (978) 463-8980
13 HAMPTON RD. EXETER, NH 03833 (603) 778-0528

SCALE: 1"=30' | DESG. BY: C.M.Y.
DATE: JUN. 1, 2022 | CHKD. BY: E.W.B.
PROJECT: M183284

PLAN OF LAND
IN
SALISBURY, MA
SHOWING
PROPOSED SITE IMPROVEMENTS
AT
163 ELM STREET

SITE PLAN

SHEET: C-4

E:\sdskproj-2018\M183284\dwg\M183284-D (C3D).dwg, 6/22/2022 11:10:53 AM

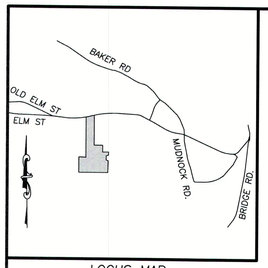

LOCUS MAP
N.T.S.

N

MSPCS - NAD 83

SHEET C-4

SHEET C-5

5+00

DMH 3

R=20'

240'

5

60.0'

PROP. MEZZANINE SPACE
1,440 S.F.

S00° 38' 55"W 871.00'

CB 7

CB 8

DMH 4

6+00

CB
48.80

GARAGE

GARAGE

BUILDING #2

GARAGE

176.16'

PROP. 10,560 S.F.
BUILDING
T.O.F.=49.5

7+50

R=20'

R=10'

9
33

N/F SOVRAN ACQUISITION LIMITED
PARTNERSHIP
BK. 34681 PG. 49

DMH 5

7+85

50

SNOW
STORAGE

50

50

50

176.16' N88° 37' 05"E

I.P. FND.

SNOW
STORAGE

GRAVEL
STORAGE
AREA

50

48

S00° 30' 09"W 274.19'

9
27

N/F
TOWN OF SALISBURY
SEWER TREATMENT PLANT LAND
151 ELM STREET
BK. 23792 PG. 545

N02° 42' 19"E 1559.94

SHEET C-5

SHEET C-6

48

44

40

WF AA-8

WF AA-7

LEGEND

W	EXISTING WATER MAIN
S	EXISTING SEWER MAIN
W	PROPOSED WATER SERVICE
S	PROPOSED SEWER MAIN
SS	PROPOSED SEWER SERVICE
G	PROPOSED GAS MAIN
GS	PROPOSED GAS SERVICE
UU	PROPOSED UNDERGROUND UTILITIES
WV	PROPOSED WATER GATE
VGC	PROP. VERTICAL GRAN. CURB
SGE	PROP. SLOPED GRAN. EDGING
	PROPOSED STREET LIGHT
	EXISTING FIRE HYDRANT
	PROPOSED WATER SHUTOFF
	PROPOSED SEWER SERVICE
	PROPOSED BUILDING LIGHT

GRAPHIC SCALE

30 0 15 30 60 120

(IN FEET)
1 inch = 30'

COMMONWEALTH OF MASSACHUSETTS
CHRISTOPHER M. YORK
CIVIL
No. 49181
REGISTERED PROFESSIONAL ENGINEER

Christ M.Y. 6-21-22

PREPARED FOR

F & D REALTY LLC
1 MELVIN STREET, SUITE D
WAKEFIELD, MA 01880

NO.	DATE	DESCRIPTION	BY
1	6/21/22	ADDRESS TOWN COMMENTS	C.M.Y.

MEI
MILLENNIUM ENGINEERING, INC.
ENGINEERING AND LAND SURVEYING
62 ELM ST. SALISBURY, MA 01952 (978) 463-8980
13 HAMPTON RD. EXETER, NH 03833 (603) 778-0528

SCALE: 1"=30'
DATE: JUN. 1, 2022
DESG. BY: C.M.Y.
CHKD. BY: E.W.B.
PROJECT: M183284

PLAN OF LAND
IN
SALISBURY, MA

SHOWING
PROPOSED SITE IMPROVEMENTS
AT
163 ELM STREET

SITE PLAN

SHEET: C-5

F:\sdskproj-2018\M183284\dwg\M183284-D (C3D).dwg, 6/22/2022 11:11:14 AM

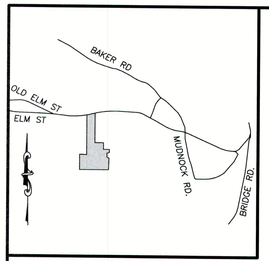

LOCUS MAP
N.T.S.

N
MSPCS - NAD 83

SHEET C-5
SHEET C-6

SNOW STORAGE

GRAVEL STORAGE AREA

176.16' N88° 37' 05"E

I.P. FND.

S00° 30' 09"W 274.19'

9/27
N/F
TOWN OF SALISBURY
SEWER TREATMENT PLANT LAND
151 ELM STREET
BK. 23792 PG. 545

S01° 36' 17"E
11.74'

PROP. RET. WALL

S00° 41' 44"W 166.73'

310.86' N88° 07' 18"E

DH FND

1559.94' N02° 42' 19"E

ZONE C-3 OFFICE PARK
ZONE R-1 LOW DENSITY

SHEET C-6
SHEET C-7

LEGEND

W	EXISTING WATER MAIN
S	EXISTING SEWER MAIN
W	PROPOSED WATER SERVICE
S	PROPOSED SEWER MAIN
SS	PROPOSED SEWER SERVICE
G	PROPOSED GAS MAIN
GS	PROPOSED GAS SERVICE
UU	PROPOSED UNDERGROUND UTILITIES
W	PROPOSED WATER GATE
VGC	PROP. VERTICAL GRAN. CURB
SGE	PROP. SLOPED GRAN. EDGING
	PROPOSED STREET LIGHT
	EXISTING FIRE HYDRANT
	PROPOSED WATER SHUTOFF
	PROPOSED SEWER SERVICE
	PROPOSED BUILDING LIGHT

GRAPHIC SCALE
30 0 15 30 60 120
(IN FEET)
1 inch = 30'

COMMONWEALTH OF MASSACHUSETTS
CHRISTOPHER M. YORK
CIVIL
No. 49181
REGISTERED PROFESSIONAL ENGINEER
6-21-22

PREPARED FOR

F & D REALTY LLC
1 MELVIN STREET, SUITE D
WAKEFIELD, MA 01880

NO.	DATE	DESCRIPTION	BY
1	6/21/22	ADDRESS TOWN COMMENTS	C.M.Y.

MEI
MILLENNIUM ENGINEERING, INC.
ENGINEERING AND LAND SURVEYING
62 ELM ST. SALISBURY, MA 01952 (978) 463-8980
13 HAMPTON RD. EXETER, NH 03833 (603) 778-0528

SCALE: 1"=30'
DATE: JUN. 1, 2022
DESG. BY: C.M.Y.
CHKD. BY: E.W.B.
PROJECT: M183284

PLAN OF LAND
IN
SALISBURY, MA
SHOWING
PROPOSED SITE IMPROVEMENTS
AT
163 ELM STREET

SITE PLAN

SHEET: C-6

E:\sdskproj-2018\M183284\dwg\M183284-D (C3D).dwg, 6/22/2022 11:11:33 AM

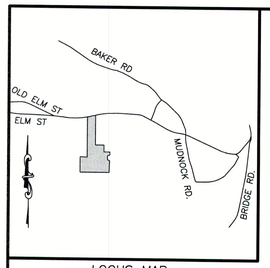

LOCUS MAP
N.T.S.

N

MSPCS - NAD 83

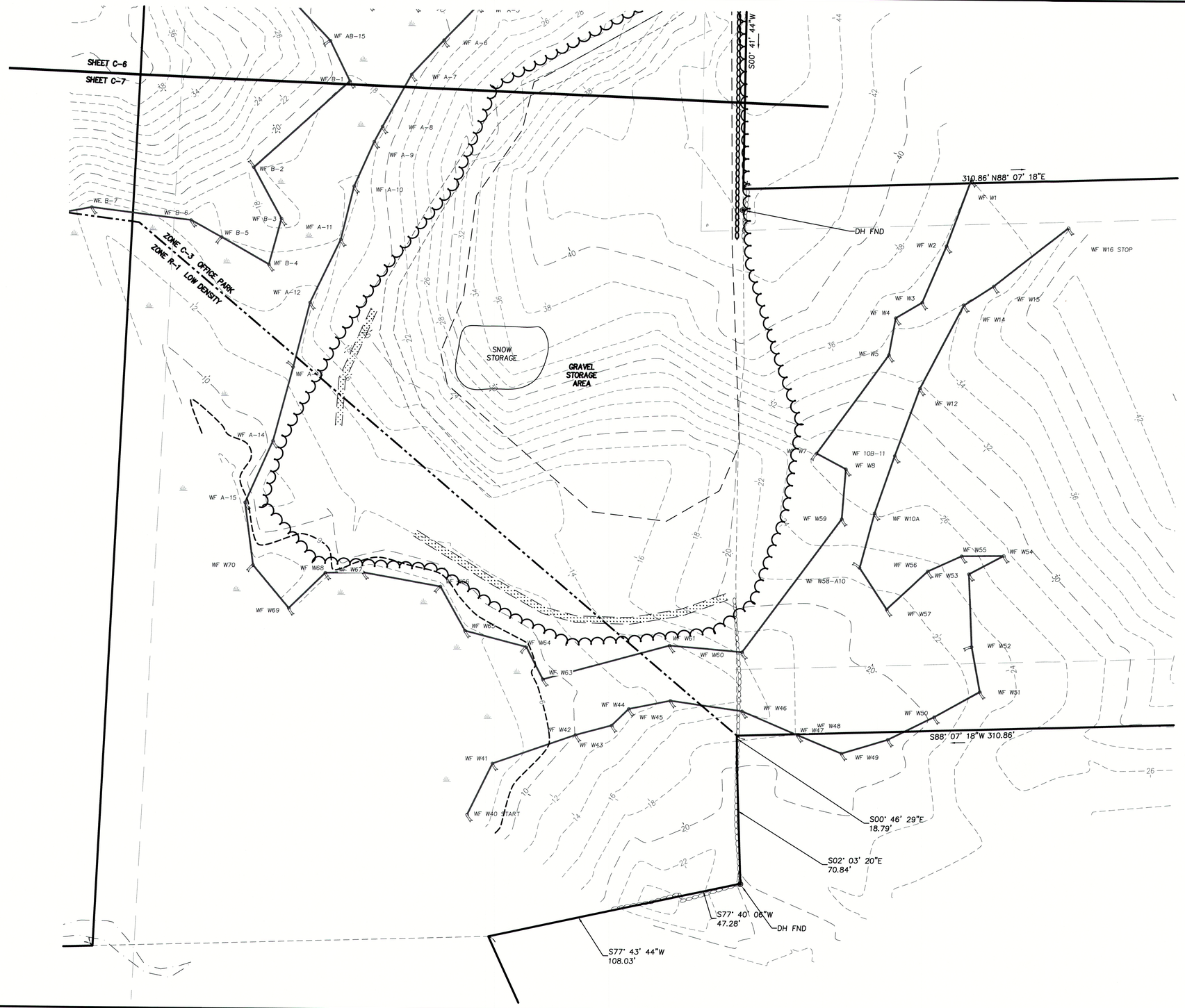

LEGEND

W	EXISTING WATER MAIN
S	EXISTING SEWER MAIN
W	PROPOSED WATER SERVICE
S	PROPOSED SEWER MAIN
SS	PROPOSED SEWER SERVICE
G	PROPOSED GAS MAIN
GS	PROPOSED GAS SERVICE
UU	PROPOSED UNDERGROUND UTILITIES
WV	PROPOSED WATER GATE
VGC	PROP. VERTICAL GRAN. CURB
SGE	PROP. SLOPED GRAN. EDGING
	PROPOSED STREET LIGHT
	EXISTING FIRE HYDRANT
	PROPOSED WATER SHUTOFF
	PROPOSED SEWER SERVICE
	PROPOSED BUILDING LIGHT

GRAPHIC SCALE
30 0 15 30 60 120
(IN FEET)
1 inch = 30'

COMMONWEALTH OF MASSACHUSETTS
CHRISTOPHER M. YORK
CIVIL
No. 49181
REGISTERED PROFESSIONAL ENGINEER
6-21-22

PREPARED FOR

F & D REALTY LLC
1 MELVIN STREET, SUITE D
WAKEFIELD, MA 01880

NO.	DATE	DESCRIPTION	BY
1	6/21/22	ADDRESS TOWN COMMENTS	C.M.Y.

MEI
MILLENNIUM ENGINEERING, INC.
ENGINEERING AND LAND SURVEYING
62 ELM ST. SALISBURY, MA 01952 (978) 463-8980
13 HAMPTON RD. EXETER, NH 03833 (603) 778-0528

SCALE: 1"=30'
DESG. BY: C.M.Y.
DATE: JUN. 1, 2022
CHKD. BY: E.W.B.
PROJECT: M183284

PLAN OF LAND
IN
SALISBURY, MA
SHOWING
PROPOSED SITE IMPROVEMENTS
AT
163 ELM STREET

SITE PLAN

SHEET: C-7

E:\sdskproj-2018\M183284\dwg\M183284-D (C3D).dwg, 6/22/2022 11:11:56 AM

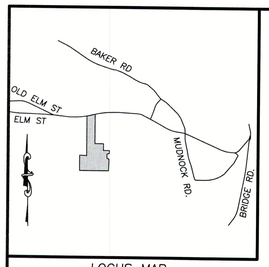

LOCUS MAP
N.T.S.

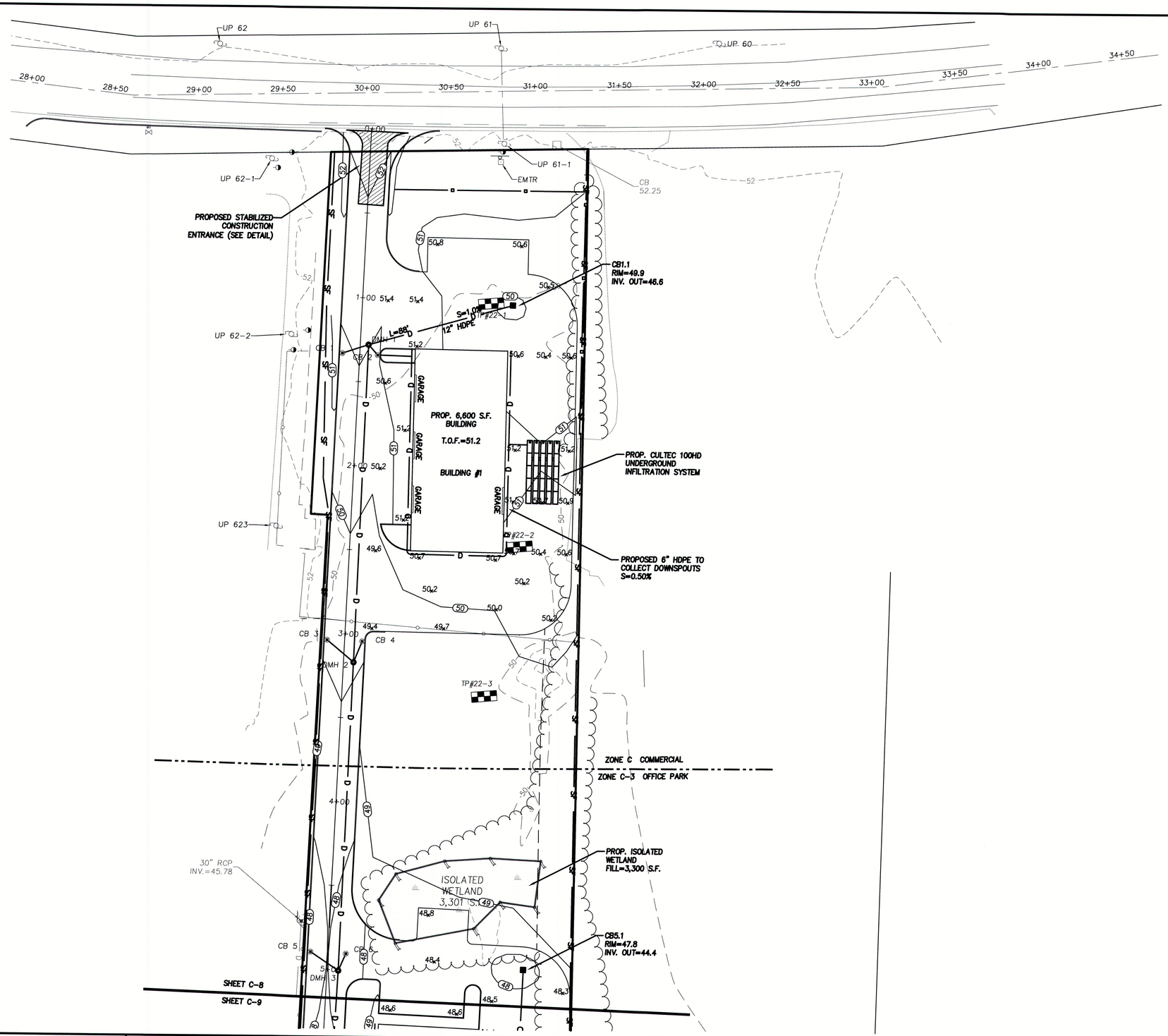

N
MSPCS - NAD 83

LEGEND

28	EXIST. CONTOUR
27	PROP. CONTOUR
SF	PROP. SILTATION BARRIER
	PROP. TREELINE/LIMIT OF WORK
	PROP. CONC. SIDEWALK
■	PROP. CATCH BASIN
28.3	PROP. SPOT GRADE
▦	PROP. OUTLET STRUCTURE
□	EXIST. CATCH BASIN
	EXIST. UTILITY POLE
	WETLANDS
TP	EXIST. TEST PIT

GRAPHIC SCALE
30 0 15 30 60 120
(IN FEET)
1 inch = 30'

COMMONWEALTH OF MASSACHUSETTS
CHRISTOPHER M. YORK
CIVIL
No. 49181
REGISTERED PROFESSIONAL ENGINEER
6-21-22

PREPARED FOR

F & D REALTY LLC
1 MELVIN STREET, SUITE D
WAKEFIELD, MA 01880

NO.	DATE	DESCRIPTION	BY
1	6/21/22	ADDRESS TOWN COMMENTS	C.M.Y.

MEI

MILLENNIUM ENGINEERING, INC.
ENGINEERING AND LAND SURVEYING
62 ELM ST. SALISBURY, MA 01952 (978) 463-8980
13 HAMPTON RD. EXETER, NH 03833 (603) 778-0528

SCALE: 1"=30'
DATE: JUN. 1, 2022
DESG. BY: C.M.Y.
CHKD. BY: E.W.B.
PROJECT: M183284

PLAN OF LAND
IN
SALISBURY, MA
SHOWING
PROPOSED SITE IMPROVEMENTS
AT
163 ELM STREET

GRADING PLAN

SHEET: C-8

E:\sdskproj-2018\M183284\dwg\M183284-D (C3D).dwg, 6/22/2022 11:16:55 AM

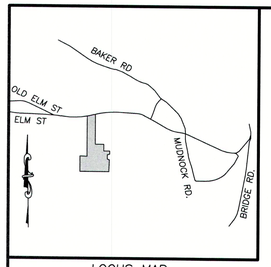

LOCUS MAP
N.T.S.

N
MSPCS - NAD 83

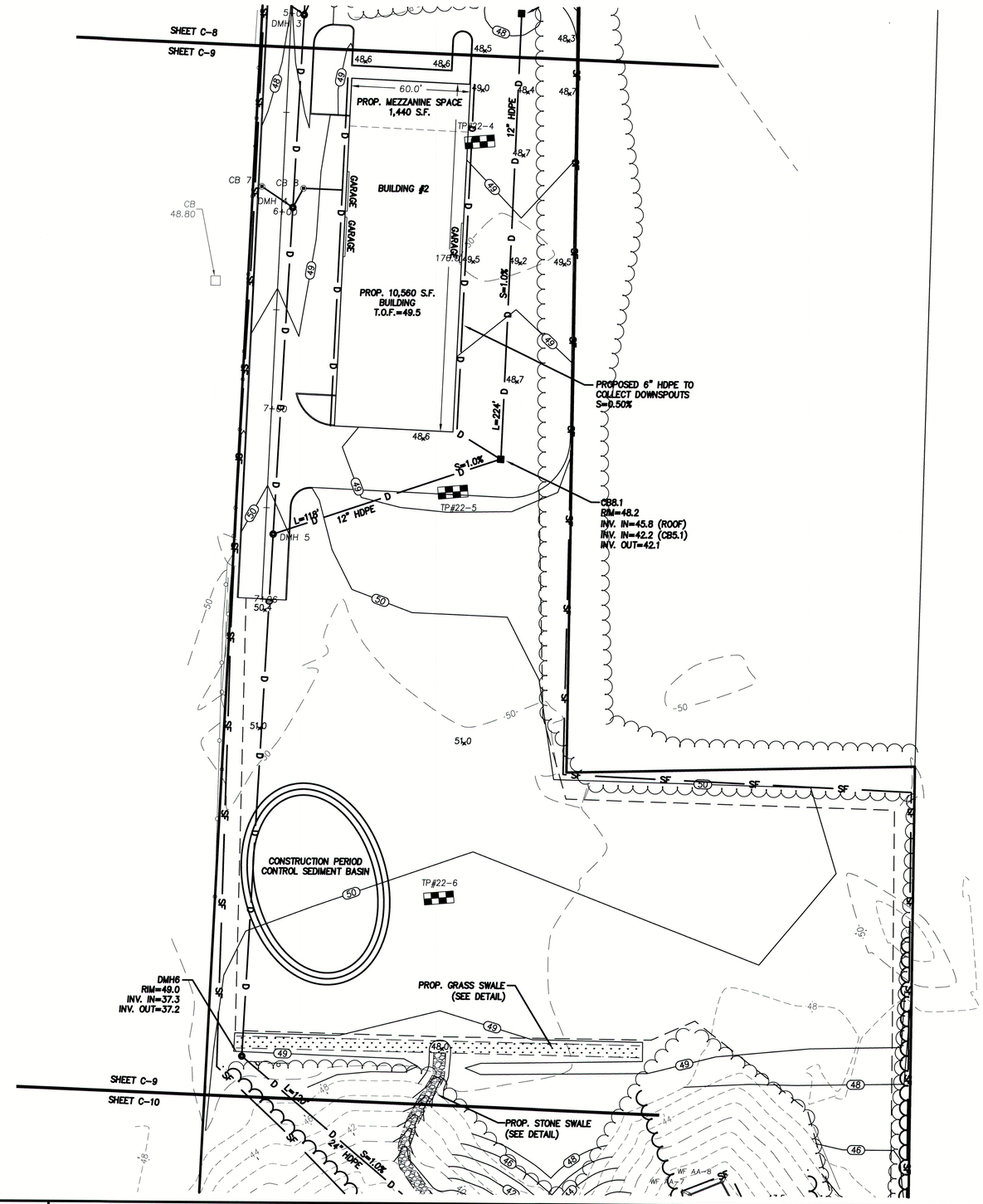

LEGEND

- EXIST. CONTOUR
- PROP. CONTOUR
- PROP. SILTATION BARRIER
- PROP. TREELINE/LIMIT OF WORK
- PROP. CONC. SIDEWALK
- PROP. CATCH BASIN
- PROP. SPOT GRADE
- PROP. OUTLET STRUCTURE
- EXIST. CATCH BASIN
- EXIST. UTILITY POLE
- WETLANDS
- EXIST. TEST PIT

GRAPHIC SCALE
30 0 15 30 60 120
(IN FEET)
1 inch = 30'

COMMONWEALTH OF MASSACHUSETTS
CHRISTOPHER M. YORK
CIVIL
No. 49181
REGISTERED PROFESSIONAL ENGINEER
6-21-22

PREPARED FOR

F & D REALTY LLC
1 MELVIN STREET, SUITE D
WAKEFIELD, MA 01880

NO.	DATE	DESCRIPTION	BY
1	6/21/22	ADDRESS TOWN COMMENTS	C.M.Y.

MEI
MILLENNIUM ENGINEERING, INC.
ENGINEERING AND LAND SURVEYING
62 ELM ST. SALISBURY, MA 01952 (978) 463-8980
13 HAMPTON RD. EXETER, NH 03833 (603) 778-0528

SCALE: 1"=30'
DATE: JUN. 1, 2022
DESG. BY: C.M.Y.
CHKD. BY: E.W.B.
PROJECT: M183284

PLAN OF LAND
IN
SALISBURY, MA
SHOWING
PROPOSED SITE IMPROVEMENTS
AT
163 ELM STREET

GRADING PLAN

SHEET: C-9

E:\sdskproj-2018\M183284\dwg\M183284-D (C3D).dwg, 6/22/2022 11:17:45 AM

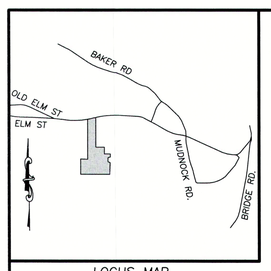

LOCUS MAP
N.T.S.

N

MSPCS - NAD 83

SHEET C-9

SHEET C-10

CONSTRUCTION PERIOD CONTROL SEDIMENT BASIN

TP#22-6

DMH6
RIM=49.0
INV. IN=37.3
INV. OUT=37.2

PROP. GRASS SWALE (SEE DETAIL)

PROP. STONE SWALE (SEE DETAIL)

D L=120'

D 24" HDPE S=1.0% D

24" HDPE
INV. OUT=36.0

TP#22-7

TP#22-8

TP#22-11

TP#22-12

TP#22-13

TP#22-14

TP#22-15

TP#22-16

PROP. INFILTRATION BASIN

PROP. EMERGENCY SPILLWAY, ELEV.=36.5 (SEE DETAILS)

43.5
41.0

42.5
36.0

41.0
34.0

40.0
36.0

42.0
40.0

46.0
39.0

45.0
39.0

43.0
41.0

SILT FENCE AND SILT SOCK SHALL BE USED WITHIN 25' OF WETLAND RESOURCE AREA

ZONE C-3 OFFICE PARK

ZONE B-1 LOW DENSITY

SHEET C-10

SHEET C-11

LEGEND

- EXIST. CONTOUR
- PROP. CONTOUR
- PROP. SILTATION BARRIER
- PROP. TREELINE/LIMIT OF WORK
- PROP. CONC. SIDEWALK
- PROP. CATCH BASIN
- PROP. SPOT GRADE
- PROP. OUTLET STRUCTURE
- EXIST. CATCH BASIN
- EXIST. UTILITY POLE
- WETLANDS
- EXIST. TEST PIT

GRAPHIC SCALE

30 0 15 30 60 120

(IN FEET)
1 inch = 30'

COMMONWEALTH OF MASSACHUSETTS
CHRISTOPHER M. YORK
CIVIL
No. 49181
REGISTERED PROFESSIONAL ENGINEER

6-21-22

PREPARED FOR

F & D REALTY LLC
1 MELVIN STREET, SUITE D
WAKEFIELD, MA 01880

NO.	DATE	DESCRIPTION	BY
1	6/21/22	ADDRESS TOWN COMMENTS	C.M.Y.

MEI

MILLENNIUM ENGINEERING, INC.
ENGINEERING AND LAND SURVEYING
62 ELM ST. SALISBURY, MA 01952 (978) 463-8980
13 HAMPTON RD. EXETER, NH 03833 (603) 778-0528

SCALE: 1"=30'
DATE: JUN. 1, 2022
DESG. BY: C.M.Y.
CHKD. BY: E.W.B.
PROJECT: M183284

PLAN OF LAND
IN
SALISBURY, MA
SHOWING
PROPOSED SITE IMPROVEMENTS
AT
163 ELM STREET

GRADING PLAN

SHEET: C-10

E:\sdskproj-2018\M183284\dwg\M183284-D (C3D).dwg, 6/22/2022 12:50:12 PM

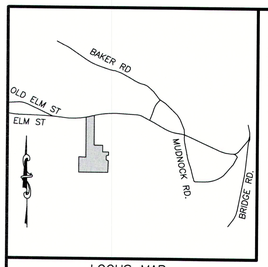

LOCUS MAP
N.T.S.

N

MSPCS - NAD 83

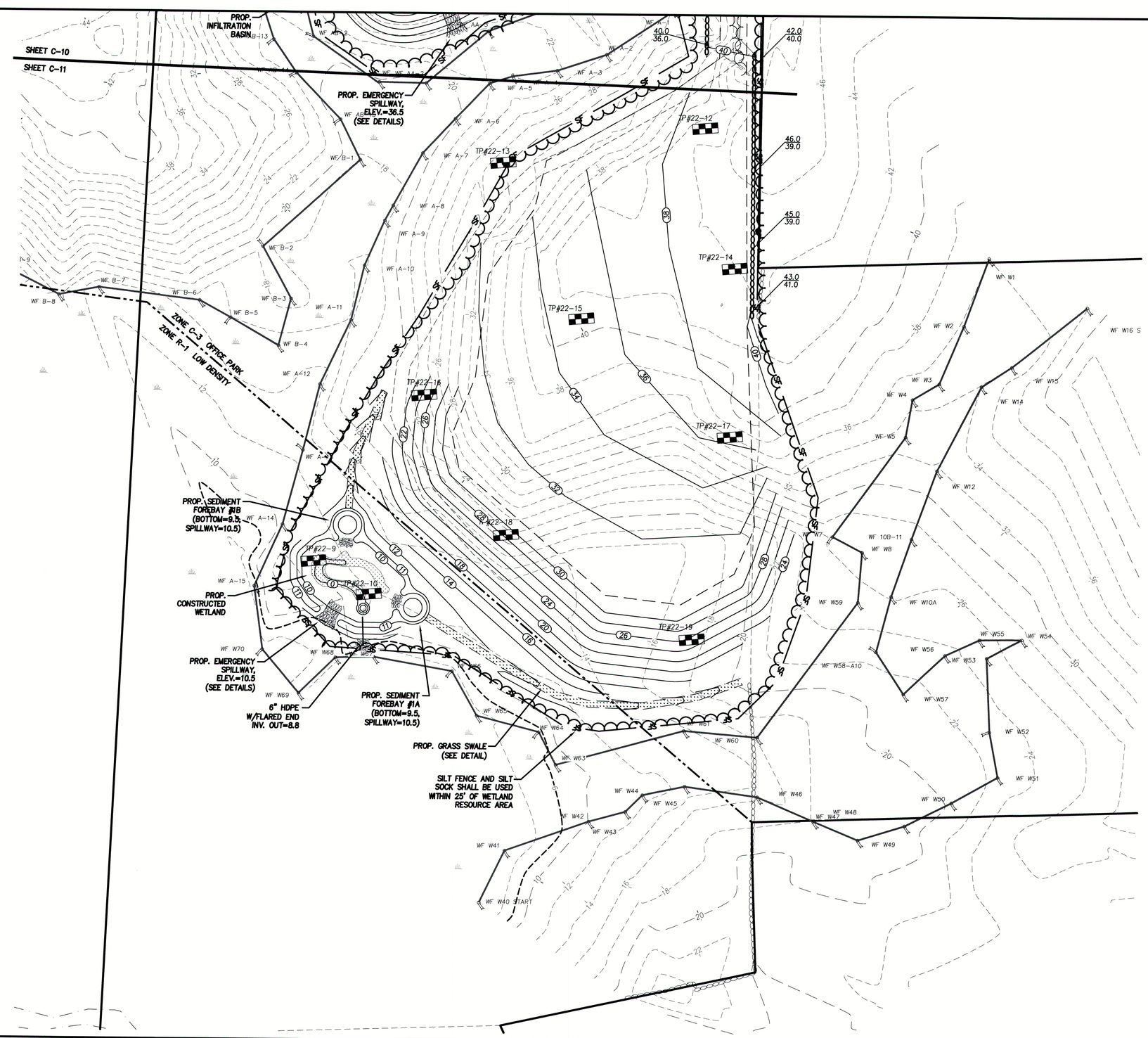

LEGEND

- 28 — EXIST. CONTOUR
- 27 — PROP. CONTOUR
- SF — PROP. SILTATION BARRIER
- PROP. TREELINE/LIMIT OF WORK
- PROP. CONC. SIDEWALK
- ■ PROP. CATCH BASIN
- 28.3 PROP. SPOT GRADE
- PROP. OUTLET STRUCTURE
- □ EXIST. CATCH BASIN
- EXIST. UTILITY POLE
- WETLANDS
- TP EXIST. TEST PIT

GRAPHIC SCALE

30 0 15 30 60 120

(IN FEET)
1 inch = 30'

COMMONWEALTH OF MASSACHUSETTS
CHRISTOPHER M. YORK
CIVIL
No. 49181
REGISTERED PROFESSIONAL ENGINEER
6-21-22

PREPARED FOR

F & D REALTY LLC
1 MELVIN STREET, SUITE D
WAKEFIELD, MA 01880

NO.	DATE	DESCRIPTION	BY
1	6/21/22	ADDRESS TOWN COMMENTS	C.M.Y.

MEI
MILLENNIUM ENGINEERING, INC.
ENGINEERING AND LAND SURVEYING
62 ELM ST. SALISBURY, MA 01952 (978) 463-8980
13 HAMPTON RD. EXETER, NH 03833 (603) 778-0528

SCALE: 1"=30' | DESG. BY: C.M.Y.
DATE: JUN. 1, 2022 | CHKD. BY: E.W.B.
PROJECT: M183284

PLAN OF LAND
IN
SALISBURY, MA
SHOWING
PROPOSED SITE IMPROVEMENTS
AT
163 ELM STREET

GRADING PLAN

SHEET: C-11

F:\sdskproj-2018\M183284\dwg\M183284-D (C3D).dwg, 6/22/2022 12:50:28 PM

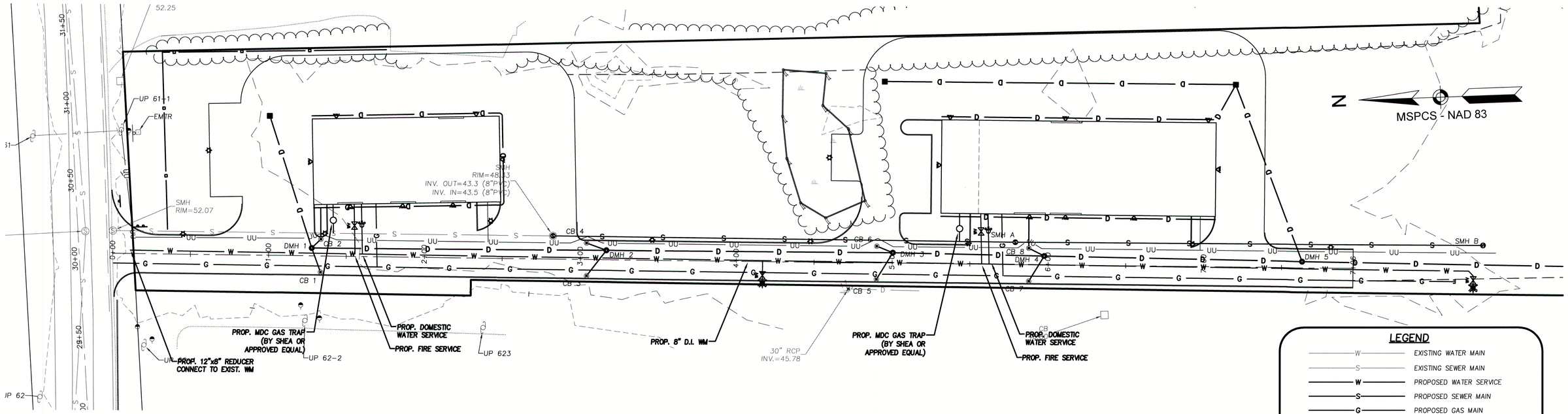

LEGEND

W	EXISTING WATER MAIN
S	EXISTING SEWER MAIN
W	PROPOSED WATER SERVICE
S	PROPOSED SEWER MAIN
G	PROPOSED GAS MAIN
UU	PROPOSED UNDERGROUND UTILITIES
	EXISTING FIRE HYDRANT
	PROPOSED WATER SHUTOFF
	PROPOSED WATER GATE
	PROPOSED SEWER SERVICE
	PROPOSED STREET LIGHT
	PROPOSED FIRE HYDRANT

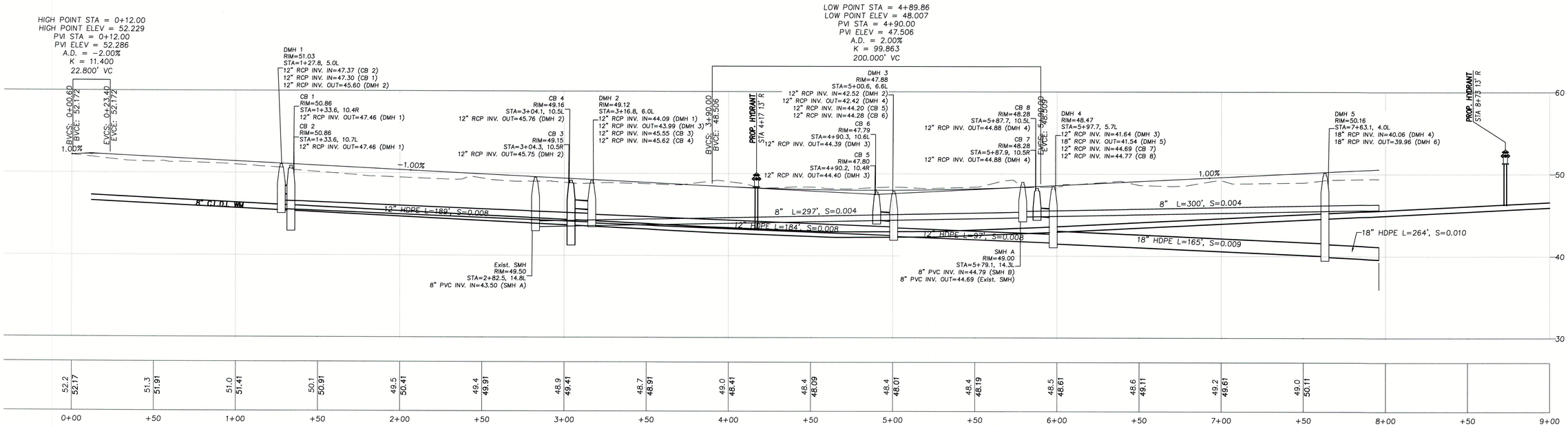

GRAPHIC SCALE

30 0 15 30 60 120
6 0 3 6 12 24

(IN FEET)
Horiz: 1 inch = 30'
Vert: 1 inch = 6'

COMMONWEALTH OF MASSACHUSETTS
CHRISTOPHER M. YORK
CIVIL
No. 49181
REGISTERED PROFESSIONAL ENGINEER
6-21-22

PREPARED FOR

F & D REALTY LLC
1 MELVIN STREET, SUITE D
WAKEFIELD, MA 01880

NO.	DATE	DESCRIPTION	BY
1	6/21/22	ADDRESS TOWN COMMENTS	C.M.Y.

MEI
MILLENNIUM ENGINEERING, INC.
ENGINEERING AND LAND SURVEYING
62 ELM ST. SALISBURY, MA 01952 (978) 463-8980
13 HAMPTON RD. EXETER, NH 03833 (603) 778-0528

SCALE: 1"=30'
DATE: JUN. 1, 2022
DESG. BY: C.M.Y.
CHKD. BY: E.W.B.
PROJECT: M183284

PLAN OF LAND
IN
SALISBURY, MA
SHOWING
PROPOSED SITE IMPROVEMENTS
AT
163 ELM STREET

UTILITY PLAN & PROFILE

SHEET: C-12

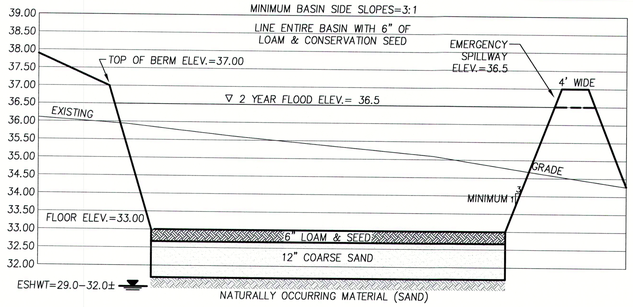

INFILTRATION BASIN TYP. CROSS-SECTION

HORIZ. SCALE: N.T.S.
VERT. SCALE: 1"=2'

CONSTRUCTION SPECIFICATIONS

1. BERMS SHALL BE CONSTRUCTED OF FILL MATERIAL FREE OF ROOTS, STUMPS, WOOD, RUBBISH, STONES GREATER THAN 6", OR OTHER OBJECTIONABLE MATERIALS. FILL MATERIAL FOR THE CENTER OF THE BERM SHALL CONFORM TO UNIFIED SOIL CLASSIFICATION GC, SC, CH, OR CL AND HAVE AT LEAST 30% PASSING THE #200 SIEVE. MATERIALS USED IN THE OUTER SHELL OF THE BERMS SHALL BE CAPABLE OF SUPPORTING THE VEGETATION SPECIFIED ON THE PLANS.
2. FILL MATERIALS SHALL BE PLACED IN MAXIMUM 8-INCH LIFTS AND COMPACTED WITH A MINIMUM REQUIRED DENSITY OF NOT LESS THAN 95% OF MAXIMUM DRY DENSITY.
3. PRIOR TO FILL MATERIAL INSTALLATION, ALL TOPSOIL, SUBSOIL, AND UNSUITABLE MATERIAL SHALL BE REMOVED AND REPLACED WITH SUITABLE MATERIAL.
4. AFTER THE INFILTRATION BASIN IS EXCAVATED TO THE FINAL DESIGN ELEVATION, THE FLOOR SHALL BE DEEPLY TILLED WITH A ROTARY TILLER OR DISC HARROW TO RESTORE INFILTRATION RATES, FOLLOWED BY A PASS WITH A LEVELING DRAG.
5. EROSION CONTROL MATTING SHALL BE INSTALLED ON ALL OUTSIDE SLOPES OF STORMWATER BASINS. MATTING SHALL BE A WOVEN JUTE MESH MANUFACTURED BY MACCAFERRI COMPANY, OR APPROVED EQUAL.
6. THE INFILTRATION BASIN BOTTOM SHALL BE CONSTRUCTED OF 6" LOAM & CONSERVATION SEED OVER A 12" LAYER OF COARSE SAND.

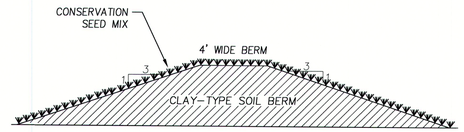

INFILTRATION BASIN BERM DETAIL

N.T.S.

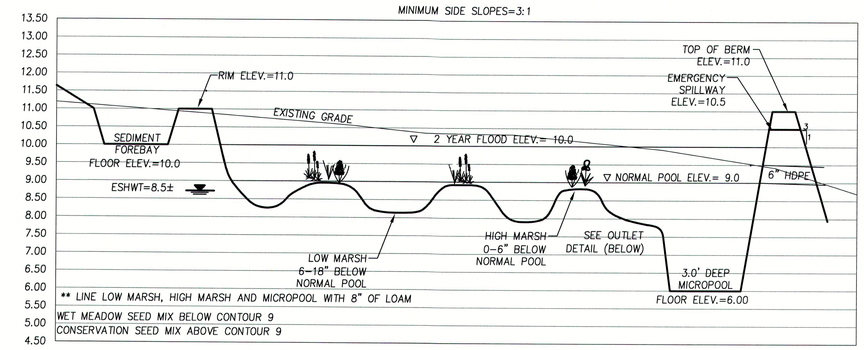

CONSTRUCTED WETLAND PROFILE VIEW

HORIZ. SCALE: N.T.S.
VERT. SCALE: 1"=2'

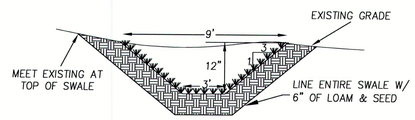

GRASS SWALE DETAIL

N.T.S.

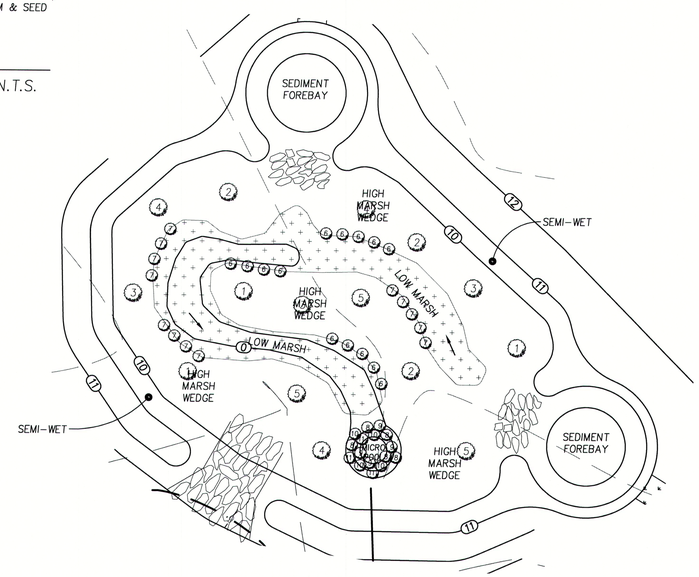

CONSTRUCTED WETLAND LAYOUT

HORIZ. SCALE: 1"=10'

GENERAL NOTES FOR CONSTRUCTED WETLANDS:

1. WETLAND BERMS SHALL BE CONSTRUCTED OF FILL MATERIAL FREE OF ROOTS, STUMPS, WOOD, RUBBISH, STONES GREATER THAN 6", OR OTHER OBJECTIONABLE MATERIALS. FILL MATERIAL FOR THE CENTER OF THE BERM SHALL CONFORM TO UNIFIED SOIL CLASSIFICATION GC, SC, CH, OR CL AND HAVE AT LEAST 30% PASSING THE #200 SIEVE. MATERIALS USED IN THE OUTER SHELL OF THE BERMS SHALL BE CAPABLE OF SUPPORTING THE VEGETATION SPECIFIED ON THE PLANS.
2. FILL MATERIALS SHALL BE PLACED IN MAXIMUM 8-INCH LIFTS AND COMPACTED WITH A MINIMUM REQUIRED DENSITY OF NOT LESS THAN 95% OF MAXIMUM DRY DENSITY.
3. PRIOR TO FILL MATERIAL INSTALLATION, ALL TOPSOIL, SUBSOIL, AND UNSUITABLE MATERIAL (i.e. LEDGE) SHALL BE REMOVED AND REPLACED WITH SUITABLE MATERIAL.
4. EROSION CONTROL MATTING SHALL BE INSTALLED ON ALL OUTSIDE SLOPES OF STORMWATER BASINS. MATTING SHALL BE A WOVEN JUTE MESH MANUFACTURED BY MACCAFERRI COMPANY, OR APPROVED EQUAL.
5. ALL PIPING WITHIN CONSTRUCTED WETLAND BERMS SHALL INCLUDE ANTI-SEEPAGE COLLARS.

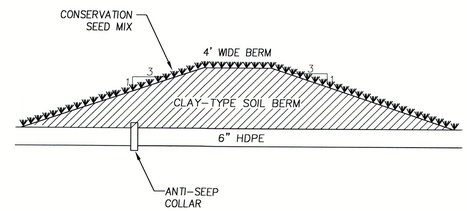

CONSTRUCTED WETLAND BERM DETAIL

N.T.S.

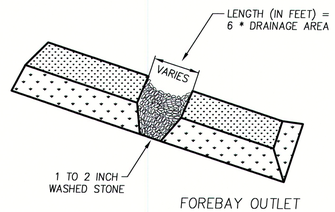

VOLUME OF SEDIMENT FOREBAY

	DRAINAGE AREA (ACRES)	VOLUME (CU. YD)	VOLUME (CU. FT)	DIMENSIONS (L x W x H)	OUTLET LENGTH
FOREBAY 1A	0.62	8.3	225	15'x15'x1.0'	6.0'
FOREBAY 1B	0.62	8.3	225	15'x15'x1.0'	6.0'

CROSS-SECTION

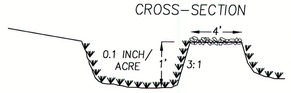

SEDIMENT FOREBAY DETAIL

N.T.S.

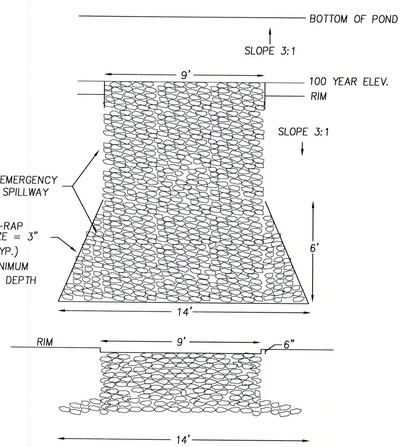

TYPICAL SPILLWAY PLAN VIEW

N.T.S.

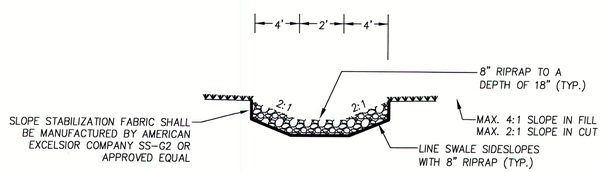

TYPICAL STONE LINED DRAINAGE CHANNEL DETAIL

N.T.S.

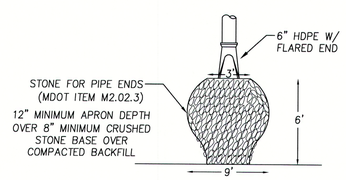

NOTE: GEOSYNTHETIC EROSION CONTROL MAT SHALL BE UNDER ALL RIP-RAP

TYPICAL RIP-RAP APRON DETAIL

N.T.S.

CONSTRUCTED WETLAND PLANT LIST

SYMBOL	COMMON NAME	LATIN NAME	HEIGHT	NUMBER	ZONE
1	SWEET PEPPERBUSH	CLETHRA ALNIFOLIA	3-4'	2	HIGH MARSH/SLOPE
2	NORTHERN ARROWWOOD	VIBURNUM DENTATUM	3-4'	2	HIGH MARSH/LOWER SLOPE
3	WINTERBERRY HOLLY	ILEX VERTICILLATA	3-4'	2 (INCL. 1 MALE)	HIGH MARSH
4	HIGHBUSH BLUEBERRY	VACCINIUM CORYMBOSUM	3-4'	2	HIGH MARSH/LOWER SLOPE
5	RED-OSIER DOGWOOD	CORNUS SERICEA	3-4'	2	HIGH MARSH/LOWER SLOPE
6	BLUE FLAG IRIS	IRIS VERSICOLOR	2" PLUGS	10	HI MARSH/LO MARSH BORDER
7	CARDINAL FLOWER	LOBELIA CARDINALIS	2" PLUGS	10	EDGE HI MARSH/LO MARSH INTO HIGH MARSH
8	SOFT-STEM BULRUSH	SCHOENOPLECTUS TABERNAEMONTANI	2" PLUGS	10	LO SLOPE/MICROPOOL EDGE
9	GREEN BULRUSH	SCIRPUS ATROVIRENS	2" PLUGS	10	MID/LOWER MICROPOOL SLOPE
10	CHAIRMAKER'S BULRUSH	SCHOENOPLECTUS (SCIRPUS) AMERICANUS	2" PLUGS	10	MID/LOWER MICROPOOL SLOPE
11	SWEETFLAG	ACORUS AMERICANUS	2" PLUGS	10	MID/LOWER MICROPOOL SLOPE

COMMONWEALTH OF MASSACHUSETTS
CHRISTOPHER M. YORK
CIVIL
No. 49181
REGISTERED PROFESSIONAL ENGINEER
6-21-22

PREPARED FOR

F & D REALTY LLC
1 MELVIN STREET, SUITE D
WAKEFIELD, MA 01880

NO.	DATE	DESCRIPTION	BY
1	6/21/22	ADDRESS TOWN COMMENTS	C.M.Y.

MEI
MILLENNIUM ENGINEERING, INC.
ENGINEERING AND LAND SURVEYING
62 ELM ST. SALISBURY, MA 01952 (978) 463-8980
13 HAMPTON RD. EXETER, NH 03833 (603) 778-0528

SCALE: AS NOTED | DESG. BY: C.M.Y.
DATE: JUN. 1, 2022 | CHKD. BY: E.W.B.
PROJECT: M183284

PLAN OF LAND
IN
SALISBURY, MA
SHOWING
PROPOSED SITE IMPROVEMENTS
AT
163 ELM STREET

SITE DETAILS

SHEET: C-13

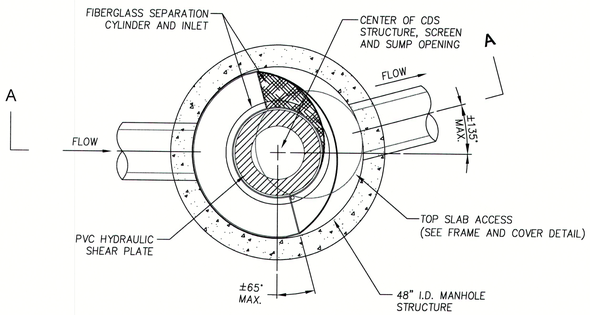

PLAN VIEW B–B
N.T.S.

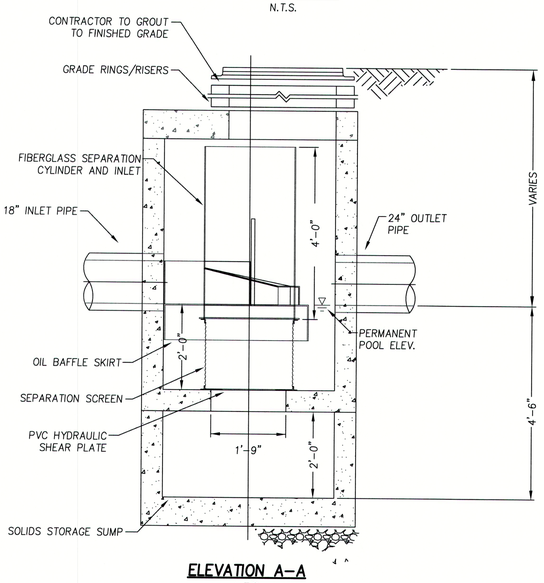

ELEVATION A–A
N.T.S.

CDS2015–4–C DETAIL
N.T.S.

FRAME AND COVER
(DIAMETER VARIES)
N.T.S.

GENERAL NOTES

1. CONTECH TO PROVIDE ALL MATERIALS UNLESS NOTED OTHERWISE.
2. DIMENSIONS MARKED WITH ( ) ARE REFERENCE DIMENSIONS. ACTUAL DIMENSIONS MAY VARY.
3. FOR FABRICATION DRAWINGS WITH DETAILED STRUCTURE DIMENSIONS AND WEIGHTS, PLEASE CONTACT YOUR CONTECH CONSTRUCTION PRODUCTS REPRESENTATIVE. www.contech–cpi.com
4. CDS WATER QUALITY STRUCTURE SHALL BE IN ACCORDANCE WITH ALL DESIGN DATA AND INFORMATION CONTAINED IN THIS DRAWING.
5. STRUCTURE SHALL MEET AASHTO HS20 AND CASTINGS SHALL MEET AASHTO M306 LOAD RATING, ASSUMING GROUNDWATER ELEVATION AT, OR BELOW, THE OUTLET PIPE INVERT ELEVATION. ENGINEER OF RECORD TO CONFIRM ACTUAL GROUNDWATER ELEVATION.
6. PVC HYDRAULIC SHEAR PLATE IS PLACED ON SHELF AT BOTTOM OF SCREEN CYLINDER. REMOVE AND REPLACE AS NECESSARY DURING MAINTENANCE CLEANING.

INSTALLATION NOTES

1. ANY SUB–BASE, BACKFILL DEPTH, AND/OR ANTI–FLOTATION PROVISIONS ARE SITE–SPECIFIC DESIGN CONSIDERATIONS AND SHALL BE SPECIFIED BY ENGINEER OF RECORD.
2. CONTRACTOR TO PROVIDE EQUIPMENT WITH SUFFICIENT LIFTING AND REACH CAPACITY TO LIFT AND SET THE CDS MANHOLE STRUCTURE (LIFTING CLUTCHES PROVIDED).
3. CONTRACTOR TO ADD JOINT SEALANT BETWEEN ALL STRUCTURE SECTIONS, AND ASSEMBLE STRUCTURE.
4. CONTRACTOR TO PROVIDE, INSTALL, AND GROUT PIPES. MATCH PIPE INVERTS WITH ELEVATIONS SHOWN.
5. CONTRACTOR TO TAKE APPROPRIATE MEASURES TO ASSURE UNIT IS WATER TIGHT, HOLDING WATER TO FLOWLINE INVERT MINIMUM. IT IS SUGGESTED THAT ALL JOINTS BELOW PIPE INVERTS ARE GROUTED.

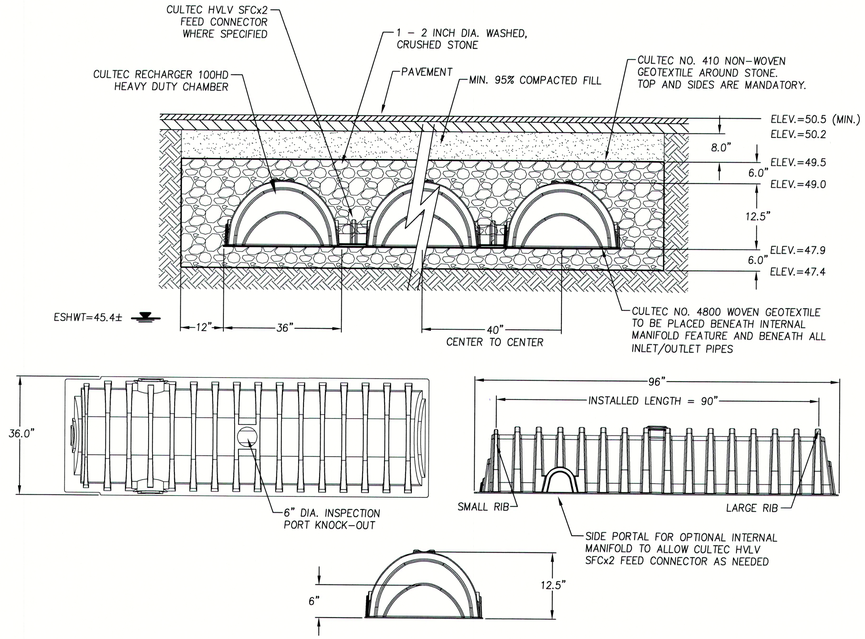

GENERAL NOTES:

1) RECHARGER 100HD BY CULTEC, INC. OF BROOKFIELD, CT. ALL RECHARGER 100HD CHAMBERS MUST BE INSTALLED IN ACCORDANCE WITH ALL APPLICABLE LOCAL, STATE AND FEDERAL REGULATIONS. REFER TO CULTEC, INC.'S CURRENT RECOMMENDED INSTALLATION.

2) PRIOR TO FILL MATERIAL INSTALLATION, ALL TOPSOIL, SUBSOIL, AND UNSUITABLE MATERIAL SHALL BE REMOVED AND REPLACED WITH COARSE SAND.

CULTEC RECHARGER 100HD DETAILS
N.T.S.

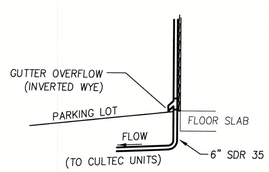

GUTTER DOWN SPOUT DETAIL
N.T.S.

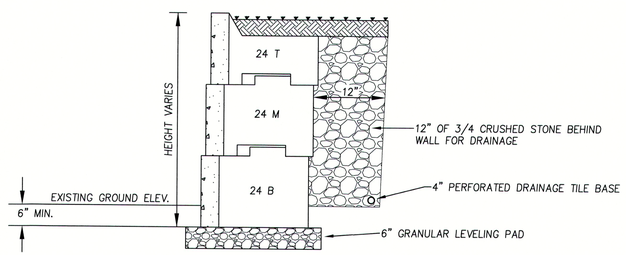

NOTE: PRIOR TO INSTALLATION CONTRACTOR SHALL PROVIDE A STRUCTURAL DESIGN OF THE WALL WHEN GREATER THAN 4' IN HEIGHT. DESIGN SHALL BE STAMPED AND SIGNED BY A STRUCTURAL ENGINEER CERTIFIED IN MASSACHUSETTS.

CONCRETE BLOCK RETAINING WALL (BY SHEA OR APPROVED EQUAL)
N.T.S.

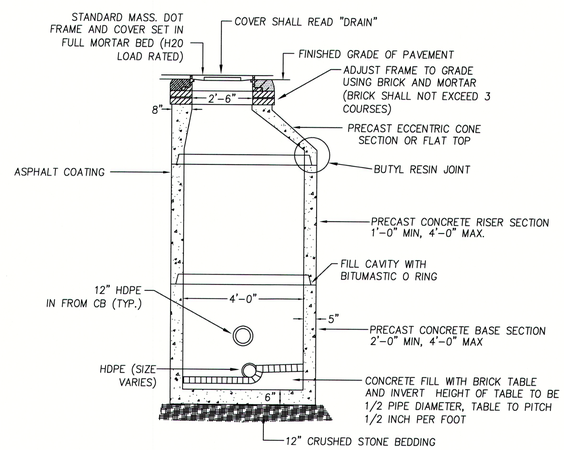

NOTES: 1) DRAIN MANHOLES SHALL CONFORM TO ASTM C478 AND ASTM C185

PRECAST DRAIN MANHOLE DETAIL
N.T.S.

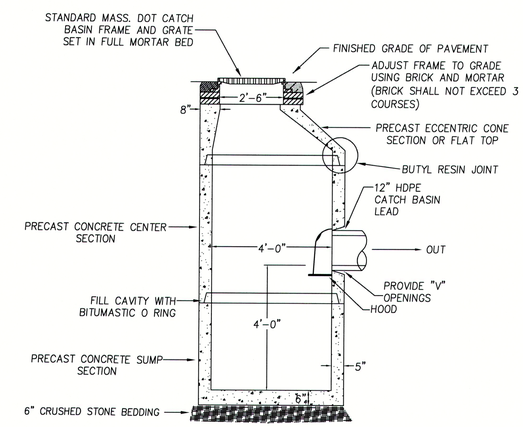

NOTES: 1) CATCH BASINS SHALL CONFORM TO ASTM C478 AND ASTM C185
2) FLAT TOP STRUCTURES SHALL BE PRECAST SECTIONS AND HAVE A 28 DAY COMPRESSIVE STRENGTH OF 5000 PSI REINFORCED FOR AASHTO H–20 LOADING.
3) CONICAL SECTIONS MAY BE SUBSTITUTED FOR FLAT–TOP STRUCTURES IN AREAS WHERE MORE THAN 4 FEET OF COVER IS PROVIDED FOR DRAIN PIPE.

PRECAST DEEP SUMP CATCH BASIN DETAIL
N.T.S.

COMMONWEALTH OF MASSACHUSETTS
CHRISTOPHER M. YORK
CIVIL
No. 49181
REGISTERED PROFESSIONAL ENGINEER
6-21-22

PREPARED FOR

F & D REALTY LLC
1 MELVIN STREET, SUITE D
WAKEFIELD, MA 01880

NO.	DATE	DESCRIPTION	BY
1	6/21/22	ADDRESS TOWN COMMENTS	C.M.Y.

MEI
MILLENNIUM ENGINEERING, INC.
ENGINEERING AND LAND SURVEYING
62 ELM ST. SALISBURY, MA 01952 (978) 463–8980
13 HAMPTON RD. EXETER, NH 03833 (603) 778–0528

SCALE: AS NOTED | DESG. BY: C.M.Y.
DATE: JUN. 1, 2022 | CHKD. BY: E.W.B.
PROJECT: M183284

PLAN OF LAND
IN
SALISBURY, MA
SHOWING
PROPOSED SITE IMPROVEMENTS
AT
163 ELM STREET

DRAINAGE DETAILS

SHEET: C–14

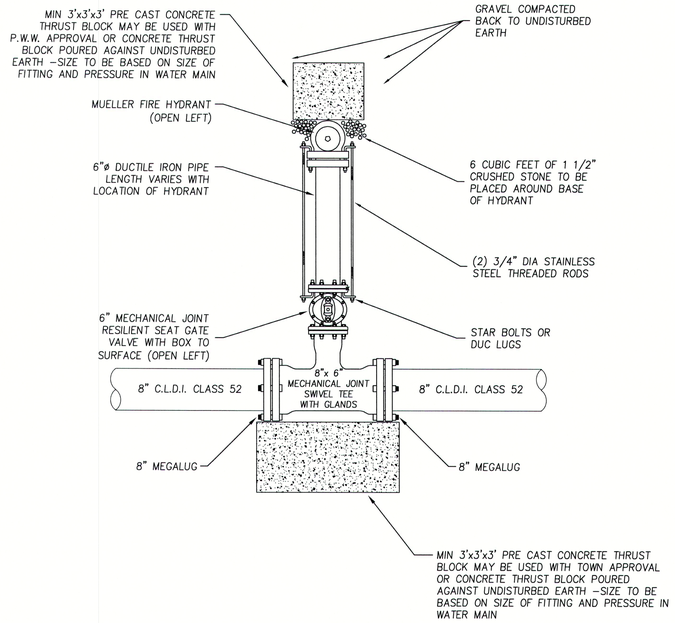

TYPICAL FIRE HYDRANT INSTALLATION

N.T.S.

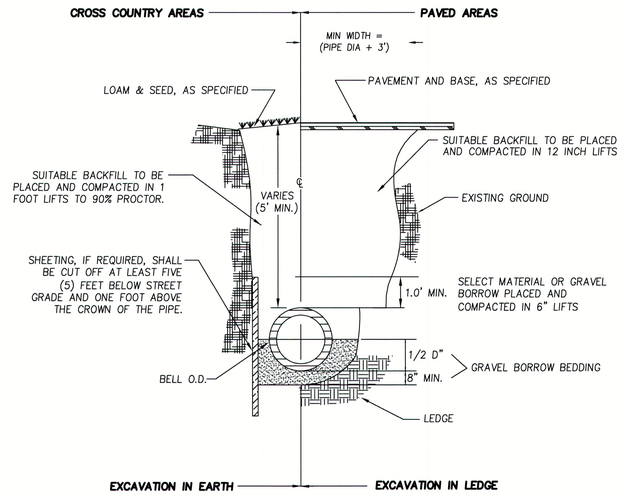

TYPICAL TRENCH DETAIL

N.T.S.

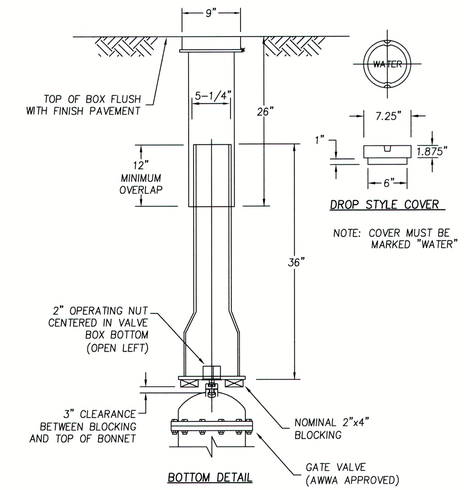

TYPICAL GATE VALVE BOX DETAIL

N.T.S.

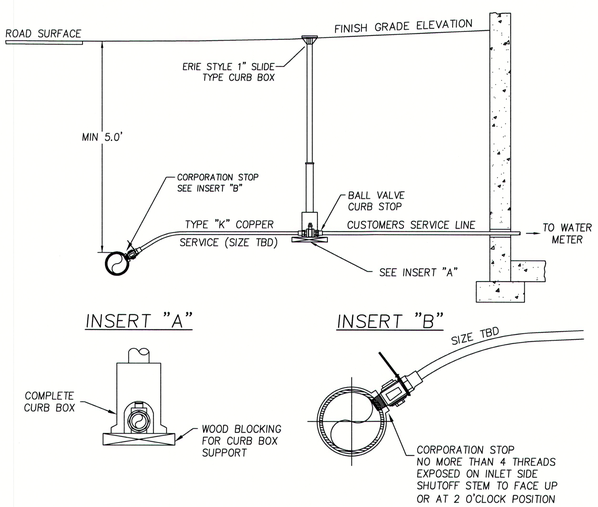

TYPICAL COPPER SERVICE CONNECTION

N.T.S.

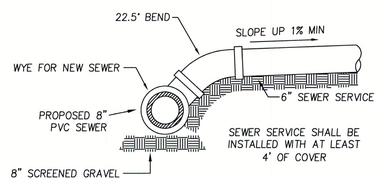

SEWER SERVICE DETAIL

N.T.S.

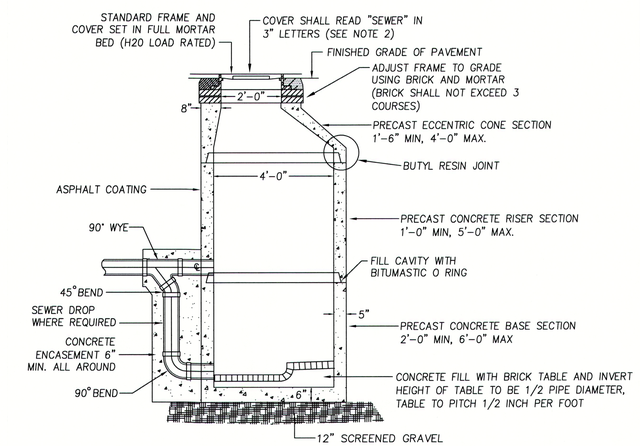

NOTES: 1) SEWER MANHOLES SHALL CONFORM TO ASTM C478 AND ASTM C185
2) COVER SHALL BE LEBARON FOUNDRY (MODEL NO. LA246), MECHANICS IRON FOUNDRY, NEEHAN FOUNDRY, OR EQUAL.

PRECAST SEWER MANHOLE DETAIL

N.T.S.

COMMONWEALTH OF MASSACHUSETTS
CHRISTOPHER M. YORK
CIVIL
No. 49181
REGISTERED PROFESSIONAL ENGINEER
6-21-22

PREPARED FOR

F & D REALTY LLC
1 MELVIN STREET, SUITE D
WAKEFIELD, MA 01880

NO.	DATE	DESCRIPTION	BY
1	6/21/22	ADDRESS TOWN COMMENTS	C.M.Y.

MEI
MILLENNIUM ENGINEERING, INC.
ENGINEERING AND LAND SURVEYING
62 ELM ST. SALISBURY, MA 01952 (978) 463-8980
13 HAMPTON RD. EXETER, NH 03833 (603) 778-0528

SCALE: AS NOTED | DESG. BY: C.M.Y.
DATE: JUN. 1, 2022 | CHKD. BY: E.W.B.
PROJECT: M183284

PLAN OF LAND
IN
SALISBURY, MA
SHOWING
PROPOSED SITE IMPROVEMENTS
AT
163 ELM STREET

UTILITY DETAILS

SHEET: C-15

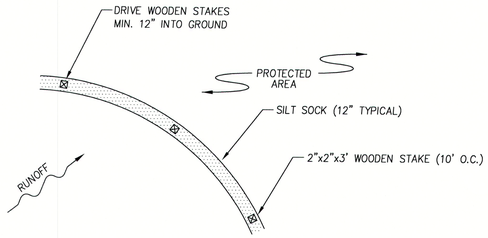

NOTES

1. ALL MATERIAL SHALL MEET SPECIFICATIONS BY FILTREXX OR APPROVED EQUAL.
2. SILT SOCK SHALL BE INSPECTED WITHIN 24 HOURS AFTER EACH RAINFALL AND AT LEAST DAILY DURING PROLONGED RAINFALL. ANY REPAIRS THAT ARE REQUIRED SHALL BE MADE IMMEDIATELY.
3. THE CONTRACTOR SHALL REMOVE SEDIMENT AT THE BASE OF THE UPSLOPE SIDE OF THE SILT SOCK WHEN ACCUMULATION HAS REACHED 1/2 OF THE EFFECTIVE HEIGHT OF THE SILT SOCK.
4. SILT SOCK SHALL BE MAINTAINED UNTIL DISTURBED AREA ABOVE THE DEVICE HAS BEEN PERMANENTLY STABILIZED AND CONSTRUCTION ACTIVITY HAS BEEN COMPLETED.
5. SEDIMENT DEPOSITS THAT ARE REMOVED OR LEFT IN PLACE AFTER THE SOCK HAS BEEN REMOVED SHALL BE GRADED TO CONFORM WITH THE EXISTING TOPOGRAPHY AND VEGETATED.

SILT SOCK INSTALLATION

N.T.S.

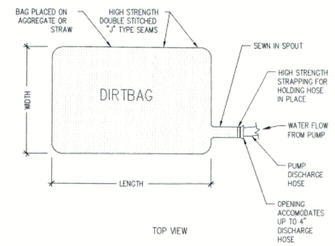

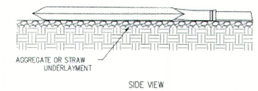

Testing Details:

Dirtbag has been tested under ASTM D-7880 and ASTM-7701. These are standard test methods for determining flow rate of water and suspended solids retention from a closed geosynthetic bag. Testing summary available upon request.

NOTE

1. "DIRTBAG" DEWATERING BAG BY ACF ENVIRONMENTAL OR APPROVED EQUAL.

TYPICAL DEWATERING DETAIL

N.T.S.

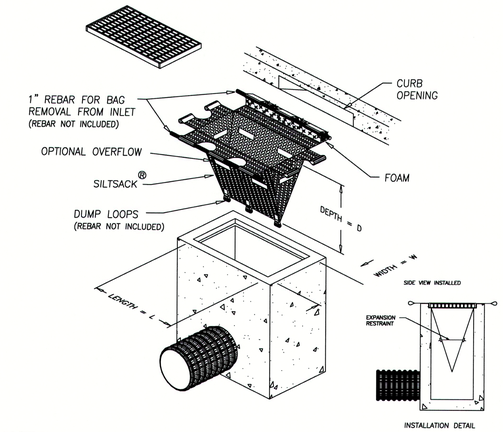

NOTES

1. TO INSTALL SILTSACK IN THE CATCH BASIN, REMOVE THE GRATE AND PLACE THE SACK IN THE OPENING. HOLD APPROXIMATELY SIX INCHES OF THE SACK OUTSIDE THE FRAME. THIS IS THE AREA OF THE LIFTING STRAPS. REPLACE THE GRATE TO HOLD THE SACK IN PLACE.
2. WHEN THE RESTRAINT CORD IS NO LONGER VISIBLE, SILTSACK IS FULL AND SHOULD BE EMPTIED.
3. TO REMOVE SILTSACK, TAKE TWO PIECES OF 1" DIAMETER REBAR AND PLACE THROUGH THE LIFTING LOOPS ON EACH SIDE OF THE SACK TO FACILITATE THE LIFTING OF SILTSACK.
4. TO EMPTY SILTSACK, PLACE UNIT WHERE THE CONTENTS WILL BE COLLECTED. PLACE THE REBAR THROUGH THE LIFT STRAPS (CONNECTED TO THE BOTTOM OF THE SACK) AND LIFT. THIS WILL LIFT SILTSACK FROM THE BOTTOM AND EMPTY THE CONTENTS. CLEAN OUT AND RINSE. RETURN SILTSACK TO ITS ORIGINAL SHAPE AND PLACE BACK IN THE BASIN.
5. SILTSACK IS REUSABLE. ONCE THE CONSTRUCTION CYCLE IS COMPLETE, REMOVE SILTSACK FROM THE BASIN AND CLEAN. SILTSACK SHOULD BE STORED OUT OF SUNLIGHT UNTIL NEXT USE.

SILT SACK DETAIL

N.T.S.

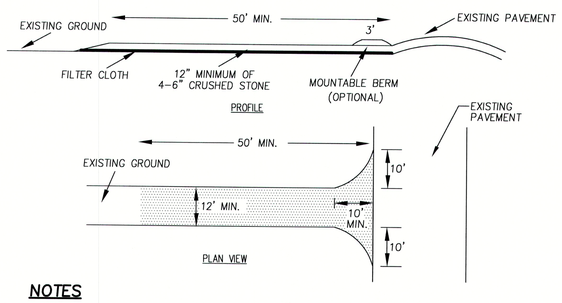

NOTES

1. STONE SHALL BE 4-6" CRUSHED STONE OR RECLAIMED STONE.
2. THE LENGTH OF THE STABILIZED ENTRANCE SHALL NOT BE LESS THAN 50'.
3. THE THICKNESS OF THE STONE FOR THE STABILIZED ENTRANCE SHALL NOT BE LESS THAN 12".
4. GEOTEXTILE FILTER CLOTH SHALL BE PLACED OVER THE ENTIRE AREA PRIOR TO PLACING THE STONE.
5. ALL SURFACE WATER THAT IS FLOWING TO OR DIVERTED TOWARD THE CONSTRUCTION ENTRANCE SHALL BE PIPED BENEATH THE ENTRANCE. IF PIPING IS IMPRACTICAL, A BERM WITH 5:1 SLOPES THAT CAN BE CROSSED BY VEHICLES MAY BE SUBSTITUTED FOR THE PIPE.
6. THE ENTRANCE SHALL BE MAINTAINED IN A CONDITION THAT WILL PREVENT TRACKING OR FLOWING OF SEDIMENT ONTO PUBLIC RIGHTS-OF-WAY. THIS MAY REQUIRE PERIODIC TOP-DRESSING WITH ADDITIONAL STONE AS CONDITIONS DEMAND AND REPAIR AND/OR CLEANOUT OF ANY MEASURES USED TO TRAP SEDIMENT. ALL SEDIMENT SPILLED, WASHED, OR TRACKED ONTO PUBLIC RIGHTS-OF-WAY MUST BE REMOVED PROMPTLY.
7. WHEELS SHALL BE CLEANED TO REMOVE MUD PRIOR TO ENTRANCE ONTO PUBLIC RIGHTS-OF-WAY. WHEN WASHING IS REQUIRED, IT SHALL BE DONE ON AN AREA STABILIZED WITH STONE WHICH DRAINS INTO AN APPROVED SEDIMENT TRAPPING DEVICE.

STABILIZED CONSTRUCTION ENTRANCE

N.T.S.

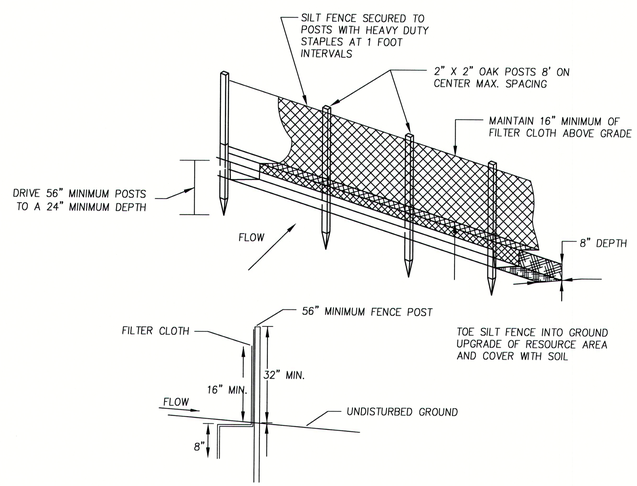

1. POSTS SHALL BE DOUBLED AND COUPLED AT FILTER CLOTH SEAMS.
2. FILTER CLOTH TO BE FASTENED SECURELY TO SUPPORT NETTING WITH TIES SPACED EVERY 24" AT TOP, MID SECTION, AND BOTTOM.
3. WHEN TWO SECTIONS OF FILTER CLOTH ADJOIN EACH OTHER, THEY SHALL BE OVERLAPPED BY 6 INCHES, FOLDED AND STAPLED.
4. MAINTENANCE SHALL BE PERFORMED AS NEEDED AND MATERIAL REMOVED WHEN "BULGES" DEVELOP IN THE SILT FENCE.

SILT FENCE INSTALLATION

N.T.S.

GENERAL EROSION CONTROL NOTES

1. ALL EROSION CONTROL SHALL BE INSTALLED BEFORE THE START OF CONSTRUCTION. EROSION CONTROL SHALL BE REMOVED UPON COMPLETION OF THE PROJECT AND STABILIZATION OF ALL SOIL.
2. ALL FILL SHALL BE FREE OF STUMPS AND LARGE STONES.
3. ANY STANDING BODIES OF WATER CREATED DURING EXCAVATION SHALL BE ELIMINATED.
4. ACCUMULATED SEDIMENT DEPOSITS UPSTREAM OF BARRIERS SHALL BE PROPERLY DISPOSED OF ON A REGULAR BASIS.
5. AREAS OUTSIDE THE LIMITS OF WORK (EROSION CONTROL/SILT FENCE LOCATIONS) DISTURBED BY THE CONTRACTOR DURING CONSTRUCTION SHALL BE RESTORED TO THEIR ORIGINAL CONDITION AT THE EXPENSE OF THE CONTRACTOR.
6. THE CONTRACTOR IS RESPONSIBLE FOR MAINTAINING EROSION AND/OR SEDIMENT CONTROLS DURING CONSTRUCTION. HE/SHE SHALL INSPECT CONTROLS WEEKLY AND AFTER EVERY 0.5" OF RAINFALL. REPAIRS, IF REQUIRED, SHALL BE MADE IMMEDIATELY.
7. TEMPORARY GROUND COVER SHALL BE ESTABLISHED IN AREAS OF CONSTRUCTION WHERE REQUIRED BY THE SALISBURY CONSERVATION COMMISSION.
8. ANY DISTURBED AREAS OF THE SITE NOT USED FOR ROADWAY OR UTILITY CONSTRUCTION SHALL BE STABILIZED WITH LOAM AND SEED UNTIL FURTHER DISTURBANCE IS REQUIRED FOR BUILDING CONSTRUCTION.
9. PROVIDE SILT SACK OR APPROVED EQUAL AT ALL CATCH BASINS.
10. A MINIMUM OF 6" OF LOAM SHALL BE INSTALLED ON ALL DISTURBED UNPAVED SURFACES.
11. PERMANENT SEED MIX SHALL BE MA STATE SLOPE MIXTURE (50% CREEPING RED FESCUE, 30% KENTUCKY 31 TALL FESCUE, 10% ANNUAL RYEGRASS, 5% RED TOP, 5% LADINO CLOVER) AND MA STATE PLOT MIXTURE (50% CREEPING RED FESCUE, 25% 85/80 KENTUCKY BLUEGRASS, 10% ANNUAL RYEGRASS, 10% RED TOP, 5% LADINO CLOVER)
12. WHERE PLACEMENT OF FILL IS REQUIRED FOR STORM WATER CONTROL, FILL SHALL BE PLACED IN AN UNFROZEN STATE UPON UNFROZEN GROUND. UNDER NO CIRCUMSTANCES SHALL FILL BE PLACED FROM NOVEMBER THROUGH JANUARY.
13. AN AREA SHALL BE CONSIDERED STABLE IF ONE OF THE FOLLOWING HAS OCCURRED: BASE COURSE GRAVELS HAVE BEEN INSTALLED IN AREAS TO BE PAVED; A MINIMUM OF 85% VEGETATED GROWTH HAS BEEN ESTABLISHED; A MINIMUM OF 3" OF NON-EROSIVE MATERIAL SUCH AS STONE OR RIPRAP HAS BEEN INSTALLED; OR EROSION CONTROL BLANKETS HAVE BEEN PROPERLY INSTALLED.
14. ALL PROPOSED VEGETATED AREAS WHICH DO NOT EXHIBIT A MINIMUM OF 85% VEGETATIVE GROWTH BY OCT. 15TH, OR WHICH ARE DISTURBED AFTER OCT. 15TH, SHALL BE STABILIZED BY SEEDING AND INSTALLING EROSION CONTROL BLANKETS ON SLOPES GREATER THAN 3:1, AND SEEDING AND PLACING 3 TO 4 TONS OF MULCH PER ACRE, SECURED WITH ANCHORED NETTING, ELSEWHERE. THE INSTALLATION OF EROSION CONTROL BLANKETS OR MULCH AND NETTING SHALL NOT OCCUR OVER ACCUMULATED SNOW OR ON FROZEN GROUND AND SHALL BE COMPLETED IN ADVANCE OF THAW OR SPRING MELT EVENTS.
15. ALL DITCHES OR SWALES WHICH DO NOT EXHIBIT A MINIMUM OF 85% VEGETATIVE GROWTH BY OCT. 15TH, OR WHICH ARE DISTURBED AFTER OCT. 15TH, SHALL BE STABILIZED TEMPORARILY WITH STONE OR EROSION CONTROL BLANKETS APPROPRIATE FOR THE DESIGN FLOW CONDITIONS.

CONSTRUCTION SEQUENCE

1. INSTALL EROSION CONTROL AT LIMIT OF WORK & STAKE OUT STORMWATER AREAS.
2. CONSTRUCT STABILIZED CONSTRUCTION ENTRANCE AS DEPICTED.
3. CLEAR AND GRUB DEBRIS TO PHASE LINE AND DISPOSE OF PROPERLY.
4. STRIP, SCREEN AND STOCKPILE TOPSOIL. TOPSOIL CAN BE TEMPORARILY STOCKPILED ON SITE PROVIDING THAT THE PERIMETER OF THE STOCKPILES ARE PROPERLY STAKED WITH SILT FENCE AT THE TOE OF SLOPE.
5. ROUGH GRADE CONSTRUCTED WETLAND AND INFILTRATION BASIN.
6. CLEAR AND EXCAVATE FOR BUILDING FOUNDATION.
7. GRADE PAVEMENT TO TOP OF SUBGRADE ELEVATIONS. ALL ROADWAYS MUST BE STABILIZED IMMEDIATELY AFTER GRADING.
8. BEGIN BUILDING CONSTRUCTION.
9. INSTALL UTILITIES/DRAINAGE STRUCTURES.
10. LOAM AND HYDROSEED SIDESLOPES AND ALL DISTURBED AREAS WITHIN 72 HOURS.
11. SPREAD, SHAPE, AND COMPACT PAVEMENT SUBBASE AS PER TYPICAL PAVEMENT SECTION TO ATTAIN FINAL DESIGN ELEVATIONS.
12. PERFORM BINDER COURSE PAVING.
13. LOAM AND HYDROSEED ANY DISTURBED SURFACES ALONG EDGES OF PAVEMENT AS REQUIRED.
14. ADD PLANTINGS TO CONSTRUCTED WETLAND.
15. PERFORM FINAL PAVING (TOP COURSE).
16. REMOVE EROSION CONTROL.

COMMONWEALTH OF MASSACHUSETTS
CHRISTOPHER M. YORK
CIVIL
No. 49181
REGISTERED PROFESSIONAL ENGINEER
6-21-22

PREPARED FOR

F & D REALTY LLC
1 MELVIN STREET, SUITE D
WAKEFIELD, MA 01880

NO.	DATE	DESCRIPTION	BY
1	6/21/22	ADDRESS TOWN COMMENTS	C.M.Y.

MEI
MILLENNIUM ENGINEERING, INC.
ENGINEERING AND LAND SURVEYING
62 ELM ST. SALISBURY, MA 01952 (978) 463-8980
13 HAMPTON RD. EXETER, NH 03833 (603) 778-0528

SCALE: AS NOTED | DESG. BY: C.M.Y.
DATE: JUN. 1, 2022 | CHKD. BY: E.W.B.
PROJECT: M183284

PLAN OF LAND
IN
SALISBURY, MA
SHOWING
PROPOSED SITE IMPROVEMENTS
AT
163 ELM STREET

EROSION CONTROL DETAILS

SHEET: C-16

TEST PIT#22-1
ELEV. = 49.9

0"	
	SANDY LOAM FILL
18"	
	C1 – F/M SAND
65"+	

ESHWT = 38" = 46.7
PERFORMED ON 3/24/22 BY A. PARKER

TEST PIT#22-2
ELEV. = 48.5

0"	
	SANDY LOAM FILL
19"	
	C1 – F/M SAND
65"+	

ESHWT = 37" = 45.4
PERFORMED ON 3/24/22 BY A. PARKER

TEST PIT#22-3
ELEV. = 48.3

0"	
	SANDY LOAM FILL
17"	
	C1 – F/M SAND
67"+	

ESHWT = 36" = 45.3
PERFORMED ON 3/24/22 BY A. PARKER

TEST PIT#22-4
ELEV. = 48.8

0"	
	SANDY LOAM FILL
12"	
	C1 – F/M SAND
70"+	

ESHWT = 37" = 45.7
PERFORMED ON 3/24/22 BY A. PARKER

TEST PIT#22-5
ELEV. = 49.4

0"	
	SANDY LOAM FILL
11"	
	C1 – F/M SAND
65"+	

ESHWT = 40" = 46.1
PERFORMED ON 3/24/22 BY A. PARKER

TEST PIT#22-6
ELEV. = 51.1

0"	
	SANDY LOAM FILL
21"	
	C1 – F/M SAND
81"+	

ESHWT = 52" = 46.8
PERFORMED ON 3/24/22 BY A. PARKER

TEST PIT#22-7
ELEV. = 36.0

0"	
	A – SANDY LOAM
8"	
	Bw – LOAMY SAND
18"	
	C1 – F/M SAND
88"+	

ESHWT = 60" = 31.0
PERFORMED ON 3/24/22 BY A. PARKER

TEST PIT#22-8
ELEV. = 36.0

0"	
	A – SANDY LOAM
8"	
	Bw – LOAMY SAND
15"	
	C1 – F/M SAND
85"+	

ESHWT = 61" = 30.9
PERFORMED ON 3/24/22 BY A. PARKER

TEST PIT#22-9
ELEV. = 11.5

0"	
	A – SANDY LOAM
8"	
	Bw – SANDY LOAM
19"	
	C1 – SILT LOAM
75"+	

ESHWT = 46" = 7.7
PERFORMED ON 3/24/22 BY A. PARKER

TEST PIT#22-10
ELEV. = 12.0

0"	
	A – SANDY LOAM
9"	
	Bw – SANDY LOAM
14"	
	C1 – SILT LOAM
42"	
	REFUSAL

ESHWT = 40" = 8.7
PERFORMED ON 3/24/22 BY A. PARKER

TEST PIT#22-11
ELEV. = 34.0

0"	
	A – SANDY LOAM
8"	
	Bw – SANDY LOAM
21"	
	C1 – SILT CLAY LOAM
72"+	

ESHWT = 21" = 32.3
PERFORMED ON 5/4/22 BY A. PARKER

TEST PIT#22-12
ELEV. = 43.0

0"	
	A – SANDY LOAM
4"	
	Bw – SANDY LOAM
12"	
	C1 – LOAMY SAND
48"	
	C2 – SANDY LOAM
80"+	

ESHWT = 54" = 38.5
PERFORMED ON 5/4/22 BY A. PARKER

TEST PIT#22-13
ELEV. = 29.0

0"	
	A – SANDY LOAM
5"	
	Bw – SANDY LOAM
19"	
	C1 – SILT LOAM
65"+	

ESHWT = 19" = 27.4
PERFORMED ON 5/4/22 BY A. PARKER

TEST PIT#22-14
ELEV. = 44.0

0"	
	A – SANDY LOAM
7"	
	Bw – SANDY LOAM
23"	
	C1 – SANDY LOAM
61"	
	C2 – SILT LOAM
80"+	

ESHWT = 19" = 42.4
PERFORMED ON 5/4/22 BY A. PARKER

TEST PIT#22-15
ELEV. = 41.0

0"	
	A – SANDY LOAM
9"	
	Bw – SANDY LOAM
17"	
	C1 – SANDY LOAM
56"	
	C2 – SILT LOAM
79"+	

ESHWT = 34" = 38.2
PERFORMED ON 5/4/22 BY A. PARKER

TEST PIT#22-16
ELEV. = 24.0

0"	
	A – SANDY LOAM
5"	
	C1 – SILT LOAM
79"+	

ESHWT = 10" = 23.2
PERFORMED ON 5/4/22 BY A. PARKER

TEST PIT#22-17
ELEV. = 36.0

0"	
	A – SANDY LOAM
9"	
	Bw – SANDY LOAM
12"	
	C1 – SANDY LOAM
43"	
	REFUSAL

ESHWT = 42" = 32.5
PERFORMED ON 5/4/22 BY A. PARKER

TEST PIT#22-18
ELEV. = 20.0

0"	
	A – SANDY LOAM
9"	
	Bw – SANDY LOAM
18"	
	C1 – SILT LOAM
75"+	

ESHWT = 20" = 18.3
PERFORMED ON 5/4/22 BY A. PARKER

TEST PIT#22-19
ELEV. = 18.0

0"	
	A – SANDY LOAM
10"	
	Bw – SANDY LOAM
21"	
	C1 – SILT LOAM
69"+	

ESHWT = 21" = 16.3
PERFORMED ON 5/4/22 BY A. PARKER

COMMONWEALTH OF MASSACHUSETTS
CHRISTOPHER M. YORK
CIVIL
No. 49181
REGISTERED PROFESSIONAL ENGINEER
6-21-22

PREPARED FOR

F & D REALTY LLC
1 MELVIN STREET, SUITE D
WAKEFIELD, MA 01880

NO.	DATE	DESCRIPTION	BY
1	6/21/22	ADDRESS TOWN COMMENTS	C.M.Y.

MEI
MILLENNIUM ENGINEERING, INC.
ENGINEERING AND LAND SURVEYING
62 ELM ST. SALISBURY, MA 01952 (978) 463-8980
13 HAMPTON RD. EXETER, NH 03833 (603) 778-0528

SCALE: AS NOTED
DATE: JUN. 1, 2022
DESG. BY: C.M.Y.
CHKD. BY: E.W.B.
PROJECT: M183284

PLAN OF LAND
IN
SALISBURY, MA
SHOWING
PROPOSED SITE IMPROVEMENTS
AT
163 ELM STREET

TEST PITS

SHEET: C-17

D-Series Size 0
LED Area Luminaire

Catalog Number	
Notes	
Type	

Hit the Tab key or mouse over the page to see all interactive elements.

d"series

Specifications

EPA:	0.95 ft² (.09 m²)
Length:	26" (66.0 cm)
Width:	13" (33.0 cm)
Height$_1$:	3" (7.62 cm)
Height$_2$:	7" (17.8 cm)
Weight (max):	16 lbs (7.25 kg)

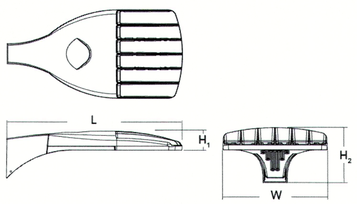

Introduction

The modern styling of the D-Series is striking yet unobtrusive - making a bold, progressive statement even as it blends seamlessly with its environment. The D-Series distills the benefits of the latest in LED technology into a high performance, high efficacy, long-life luminaire. The outstanding photometric performance results in sites with excellent uniformity, greater pole spacing and lower power density. It is ideal for replacing up to 400W metal halide with typical energy savings of 70% and expected service life of over 100,000 hours.

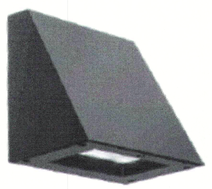

WDGE1 LED
Architectural Wall Sconce

Catalog Number	
Notes	
Type	

Hit the Tab key or mouse over the page to see all interactive elements.

Specifications

Depth (D1):	5.5"
Depth (D2):	1.5"
Height:	8"
Width:	9"
Weight: (without options)	9 lbs

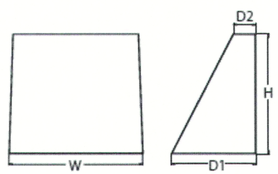

Introduction

The WDGE LED family is designed to meet specifier's every wall-mounted lighting need in a widely accepted shape that blends with any architecture. The clean rectilinear design comes in four sizes with lumen packages ranging from 1,200 to 25,000 lumens, providing true site-wide solution.

WDGE1 delivers up to 2,000 lumens with a soft, non-pixelated light source, creating a visually comfortable environment. The compact size of WDGE1, with its integrated emergency battery backup option, makes it an ideal over-the-door wall-mounted lighting solution.

WDGE2 LED
Architectural Wall Sconce
Precision Refractive Optic

Buy American

Catalog Number	
Notes	
Type	

Hit the Tab key or mouse over the page to see all interactive elements.

Specifications

Depth (D1):	7"
Depth (D2):	1.5"
Height:	9"
Width:	11.5"
Weight: (without options)	13.5 lbs

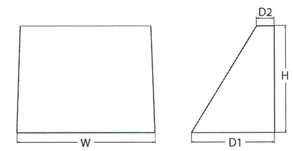

Introduction

The WDGE LED family is designed to meet specifier's every wall-mounted lighting need in a widely accepted shape that blends with any architecture. The clean rectilinear design comes in four sizes with lumen packages ranging from 1,200 to 25,000 lumens, providing a true site-wide solution. Embedded with nLight® AIR wireless controls, the WDGE family provides additional energy savings and code compliance.

WDGE2 with industry leading precision refractive optics provides great uniform distribution and optical control. When combined with multiple integrated emergency battery backup options, including an 18W cold temperature option, the WDGE2 becomes the ideal wall-mounted lighting solution for pedestrian scale applications in any environment.

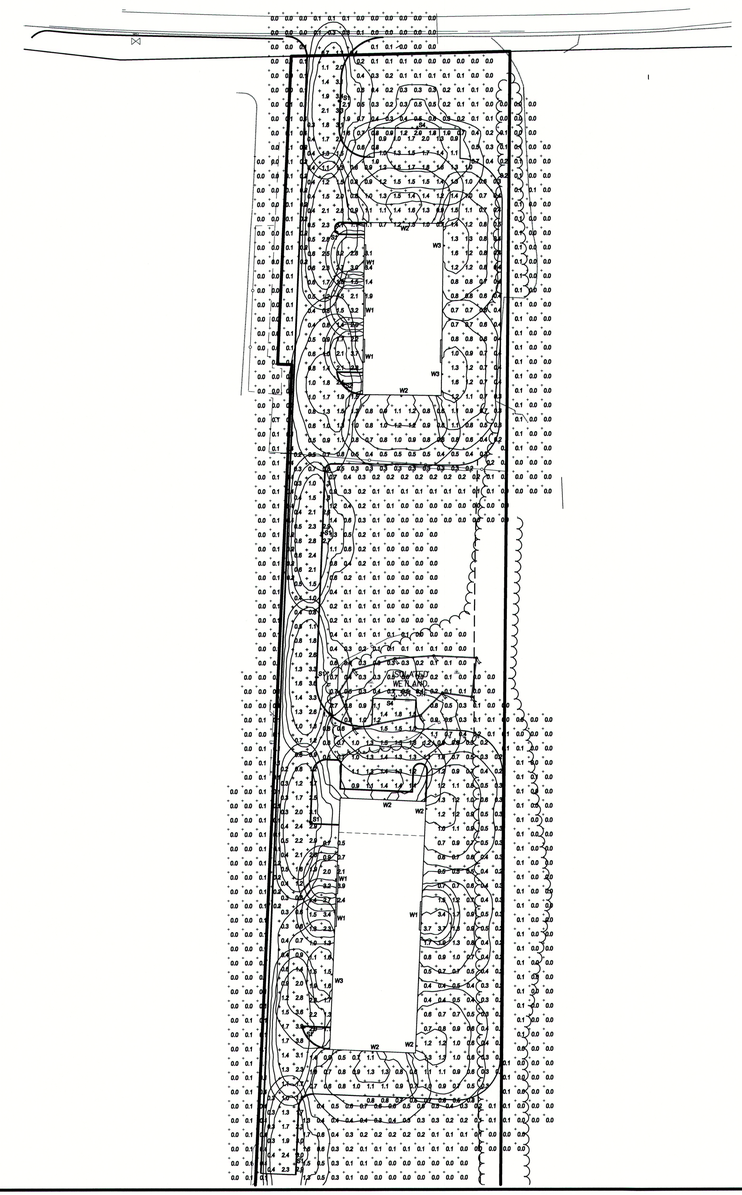

Schedule

Symbol	Label	QTY	Manufacturer	Catalog Number	Description	Lamp	Filename	Lumens per Lamp	LLF	Wattage	Distribution
	S1	7	Lithonia Lighting	DSX0 LED P2 30K T1S MVOLT SPA DDBXD with SSS 16 4C DM19AS DDBXD	DSX0 LED Area Fixture; mounted at 18ft (16ft pole on 2ft base)	LED	DSX0_LED_P2_30K_T1S_MVOLT.ies	5570	0.9	49	TYPE II, SHORT, BUG RATING: B1 - U0 - G1
	S2	1	Lithonia Lighting	DSX0 LED P2 30K T2M MVOLT SPA DDBXD with SSS 16 4C DM19AS DDBXD	DSX0 LED Area Fixture; mounted at 18ft (16ft pole on 2ft base)	LED	DSX0_LED_P2_30K_T2M_MVOLT.ies	5564	0.9	49	TYPE III, MEDIUM, BUG RATING: B1 - U0 - G2
	S4	2	Lithonia Lighting	DSX0 LED P2 30K TFTM MVOLT SPA DDBXD with SSS 16 4C DM19AS DDBXD	DSX0 LED Area Fixture; mounted at 18ft (16ft pole on 2ft base)	LED	DSX0_LED_P2_30K_TFTM_MVOLT.ies	5576	0.9	49	TYPE IV, SHORT, BUG RATING: B1 - U0 - G2
	W1	6	Lithonia Lighting	WDGE1 LED P2 30K 80CRI VF SRM DDBXD	WDGE1 LED Wallpack; mounted at 14ft	LED	WDGE1_LED_P2_30K_80CRI_VF.ies	1872	0.9	15.0178	TYPE II, VERY SHORT, BUG RATING: B1 - U0 - G0
	W2	7	Lithonia Lighting	WDGE2 LED P4 30K 80CRI TFTM SRM DDBXD	WDGE2 LED Wallpack; mounted at 18ft	LED	WDGE2_LED_P4_30K_80CRI_TFTM.ies	4002	0.9	46.6589	TYPE IV, SHORT, BUG RATING: B1 - U0 - G1
	W3	3	Lithonia Lighting	WDGE2 LED P4 30K 80CRI T3M	WDGE2 LED Wallpack; mounted at 18ft	LED	WDGE2_LED_P4_30K_80CRI_T3M.ies	4065	0.9	46.6589	TYPE III, MEDIUM, BUG RATING: B1 - U0 - G1

Statistics

Description	Symbol	Avg	Max	Min	Max/Min	Avg/Min
Building #1 Parking Lot	+	1.1 fc	3.7 fc	0.2 fc	18.5:1	5.5:1
Building #2 Parking Lot	+	0.9 fc	3.9 fc	0.2 fc	19.5:1	4.5:1
Driveway	+	1.4 fc	3.9 fc	0.2 fc	19.5:1	7.0:1
Outside of Driveway/Parking Lot	+	0.1 fc	2.3 fc	0.0 fc	N/A	N/A

Site Lighting Layout
At
163 ELM STREET

Designer
Heidi G. Connors
Visible Light, Inc.
24 Stickney Terrace
Suite 6
Hampton, NH 03842
Date
6/21/2022
Scale
1"=50'
Drawing No.

Summary

E-1

163 Elm Plant List

Trees				
2	Acer rubrum 'October Glory'	October Glory Red Maple	2.5-3" cal.	
1	Cornus x rutban	Dogwood	2-2.5" cal.	
2	Liquidambar styraciflua	Sweetgum	2.5-3" cal.	
10	Thuja 'Green Giant'	Arborvitae	8-10' ht.	
Shrubs				
5	Hydrangea paniculata 'Quickfire'	Panicle Hydrangea	5 gal.	
6	Ilex verticillata	Winterberry	5 gal.	
17	Physocarpus opulifolius	Ninebark	5 gal.	
10	Taxus x media 'Densiformis'	Yew	5 gal.	

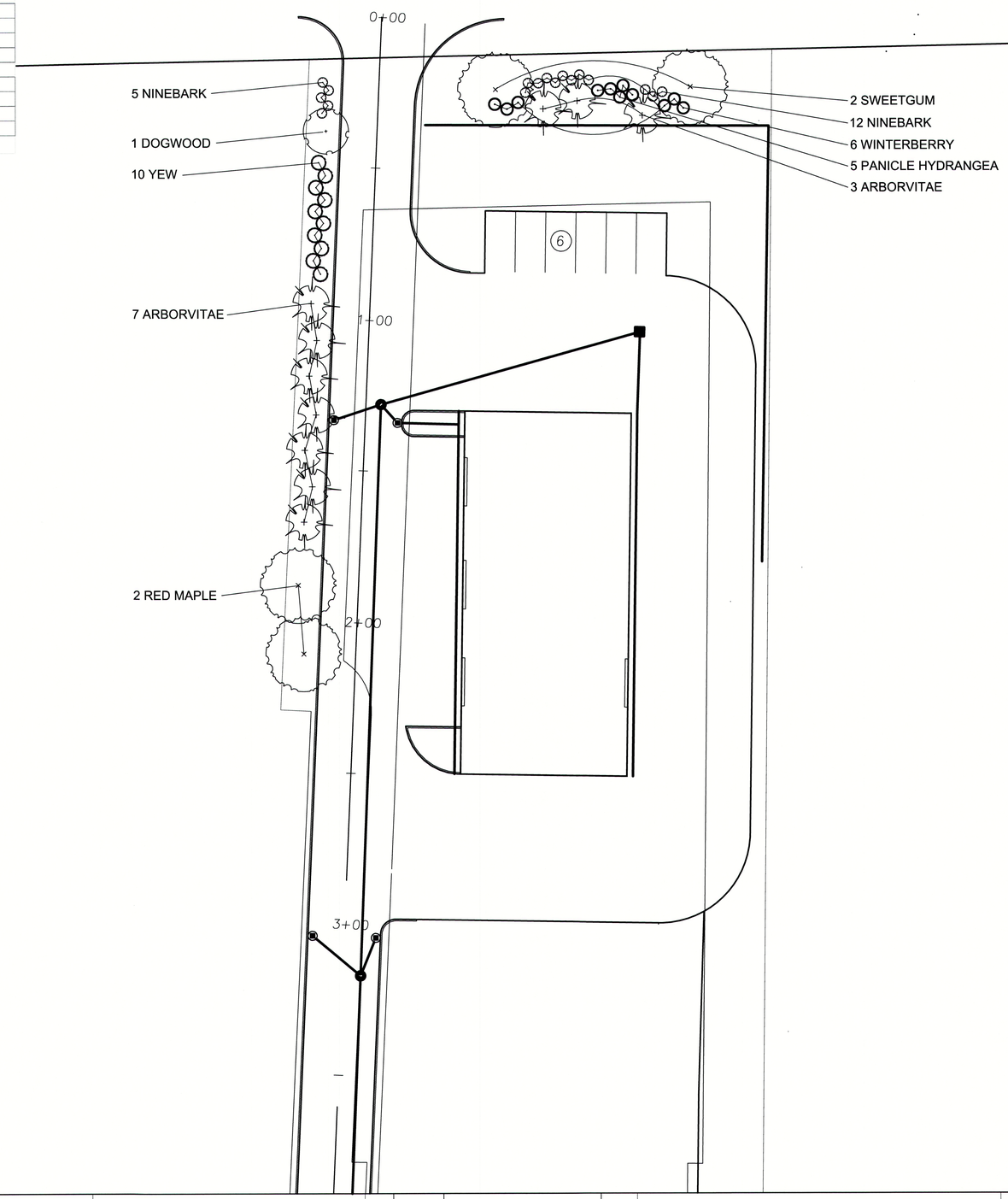

GRAPHIC SCALE

20 0 10 20 40 80

(IN FEET)
1 inch = 20'

PREPARED FOR

NO.	DATE	DESCRIPTION	BY
4			
3			
2			
1	6/13/22	FOR REVIEW	KT

KDTurner Design
landscape architecture
27 High St.
Newburyport, MA 01950
ph) 781.632.6004

SCALE: 1"=20'
DATE: JUNE 13, 2022

LANDSCAPE PLAN
IN
SALISBURY, MA

SHOWING
PROPOSED SITE DEVELOPMENT
AT
163 ELM STREET

L-1